**Hill International North Africa Ltd.**
Plot 140, NCFC Building,
Banks Zone, 1st District,
Fifth Settlement, New Cairo,
Cairo, Egypt
Tel: +202 2322 0000
Fax: +202 2322 0022
www.hillintl.com

**Date: January 5, 2025**

**Ref: PEG-1155-93M-CN-HI-BOA-LET-RS-11885**
**Jean Marc Decloquement**
Consortium Director
Blocks 277-278,2nd business sector,
Teseen st, Shaker Consultancy Building
New Cairo, Egypt.

**Project: Engineering, Procurement and Construction of the New Administrative Capital Monorail and 6th October City Monorail (Contract 93/Metro).**

**Subject: Comments on shop drawings. //** 93M-BOA-NAT-LOT- 29027

**References:**

1. Hill's Letter ref. PEG-1155-93M-CN-HI-BOA-LET-JB-0164
2. Hill's Letter no- PEG-1155-93M-CN-HI-BOA-LET-JB-0205
3. Contractor's Transmittal ref. 93M-BOA-NAT-LOT-29027

Dear Sir,

We note that the below shop drawings (in the Annexure) were uploaded on Aconex with status "closed". We note that there are some comments within the drawings needed to be addressed before commencing the site work.

The comments on the shop drawings as per attached annexure.

The Contractor is advised to correct the above into the shop drawings before any issuance to his site staff.

The Contractor is hereby further notified that in any such eventuality of rework, dismantling of constructed structure on account of such omission on the part of Contractor, it will be to Contractor's account and we re-iterate that any deviations from the approved drawings will triggers withholding from the upcoming payments pursuant to Sub-Clause 14.6 (b) of Conditions of Contract.

For and on behalf of
Hill International (Africa) Ltd

**Navendu Lad**
**Acting Project Director**
**Attachments**:

1. Comments table.
2. Stamped Drawings listed in the attached "Comments table".

**Initial /reviewed by: RS**
Reply Required: (X ) Yes ( ) No
**Cc:** NAT

DELIVERING THE INFRASTRUCTURE OF CHANGE

# 93M-BOA-NAT-LOT-29027

| S.No. | Drawing name | Comments |
|---|---|---|
| 1 | 93M-0407-ACC-60L11-DWG-90445-A-3D-VIEW | - It is the contractor responsibility to ensure and revise all Dimensions and levels with the approved design drawings besides the coordination package before commencing any site Works. |
| 2 | 93M-0407-ACC-60L11-DWG-90446-A-GENERAL LAYOUT | -Please check apply camber at assembly drawing .<br> 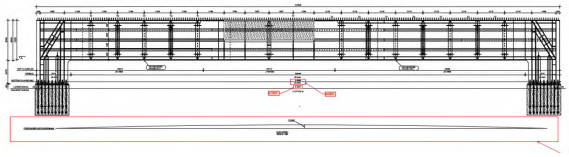 <br>-Approval is subject to approval of coordination package between multi-disciplines. |
| 3 | 93M-0407-ACC-60L11-DWG-90447-A-SECTIONS DETAILS.01 | -Approval is subject to approval of coordination package between multi-disciplines. |
| 4 | 93M-0407-ACC-60L11-DWG-90448-A-SECTIONS DETAILS.02 | Please clarify SEC<br> 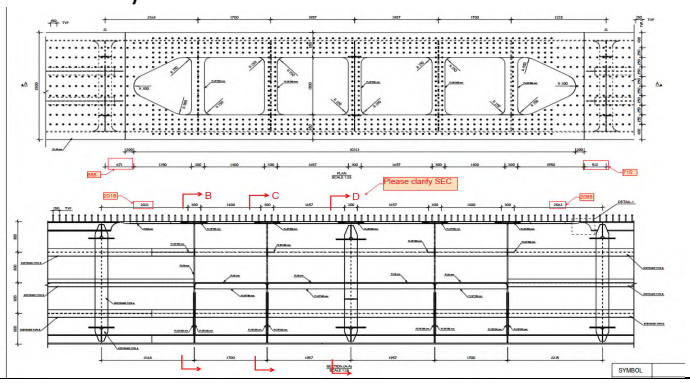 |
| 5 | 93M-0407-ACC-60L11-DWG-90449-A-SECTIONS DETAILS.03 | -Approval is subject to approval of coordination package between multi-disciplines.<br>-Mismatched opening location please check.<br> 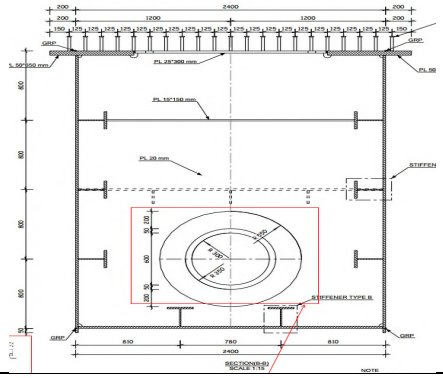 |

| | | |
|---|---|---|
| | | 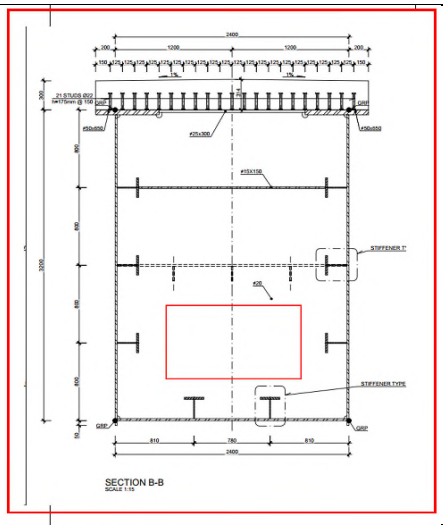 |
| 6 | 93M-0407-ACC-60L11-DWG-90450-A-SECTIONS DETAILS.04 | -Approval is subject to approval of coordination package between multi-disciplines. |
| 7 | 93M-0407-ACC-60L11-DWG-90451-A-SECTIONS DETAILS.05 | -Approval is subject to approval of coordination package between multi-disciplines. |
| 8 | 93M-0407-ACC-60L11-DWG-90452-A-SECTIONS DETAILS.06 | -Approval is subject to approval of coordination package between multi-disciplines.<br> 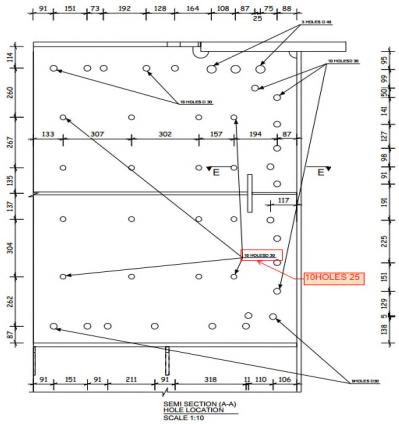 |
| 9 | 93M-0407-ACC-60L11-DWG-90453-A-SECTIONS DETAILS.07 | -Approval is subject to approval of coordination package between multi-disciplines.<br>-Missing HELIX &MISSING DUCT&MISSING 7 LINKS |

| | | |
|---|---|---|
| | | 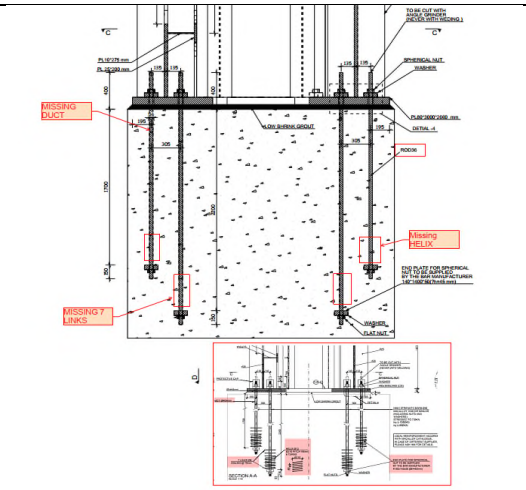 |
| 10 | 93M-0407-ACC-60L11-DWG-90454-A-SECTIONS DETAILS.08 | -Approval is subject to approval of coordination package between multi-disciplines.<br>-Missing HELIX &MISSING DUCT&MISSING 7 LINKS<br> 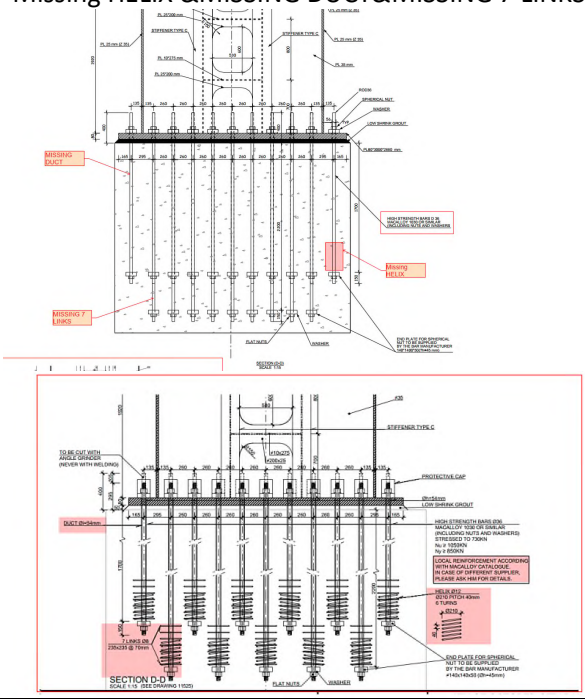 |
| 11 | 93M-0407-ACC-60L11-DWG-90455-A-SECTIONS DETAILS.09 | -Approval is subject to approval of coordination package between multi-disciplines. |
| 12 | 93M-0407-ACC-60L11-DWG-90456-A-SECTIONS DETAILS.10 | -Approval is subject to approval of coordination package between multi-disciplines. |
| 13 | 93M-0407-ACC-60L11-DWG-90457-A-3D-VIEW | -Drawing shall be updated according to the comments on the GA drawing.<br>-Approval is subject to approval of coordination package between multi-disciplines. |

| | | |
|---|---|---|
| 14 | 93M-0407-ACC-60L11-DWG-90458-A-Sections Details-01 | -Drawing shall be updated according to the comments on the GA drawing.<br>-Approval is subject to approval of coordination package between multi-disciplines.<br>-Please check apply camber at assembly drawing .<br> 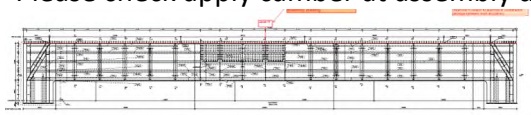 |
| 15 | 93M-0407-ACC-60L11-DWG-90459-A-Sections Details-02 | -Drawing shall be updated according to the comments on the GA drawing.<br>-Approval is subject to approval of coordination package between multi-disciplines. |
| 16 | 93M-0407-ACC-60L11-DWG-90460-A-Sections Details-03 | -Drawing shall be updated according to the comments on the GA drawing.<br>-Approval is subject to approval of coordination package between multi-disciplines. |
| 17 | 93M-0407-ACC-60L11-DWG-90461-A-Sections Details-04 | -Drawing shall be updated according to the comments on the GA drawing.<br>-Approval is subject to approval of coordination package between multi-disciplines. |
| 18 | 93M-0407-ACC-60L11-DWG-90462-A-Sections Details-05 | -Drawing shall be updated according to the comments on the GA drawing.<br>-Approval is subject to approval of coordination package between multi-disciplines. |
| 19 | 93M-0407-ACC-60L11-DWG-90463-A-Sections Details-06 | -Drawing shall be updated according to the comments on the GA drawing.<br>-Approval is subject to approval of coordination package between multi-disciplines. |
| 20 | 93M-0407-ACC-60L11-DWG-90464-A-Sections Details-07 | -Drawing shall be updated according to the comments on the GA drawing.<br>-Approval is subject to approval of coordination package between multi-disciplines. |
| 21 | 93M-0407-ACC-60L11-DWG-90465-A-Sections Details-08 | -Drawing shall be updated according to the comments on the GA drawing.<br>-Approval is subject to approval of coordination package between multi-disciplines. |

| | | |
|---|---|---|
| 22 | 93M-0407-ACC-60L11-DWG-90466-A | -Drawing shall be updated according to the comments on the GA drawing.<br>-Approval is subject to approval of coordination package between multi-disciplines. |
| 23 | 93M-0407-ACC-60L11-DWG-90467-A | -Drawing shall be updated according to the comments on the GA drawing.<br>-Approval is subject to approval of coordination package between multi-disciplines. |
| 24 | 93M-0407-ACC-60L11-DWG-90468-A | -Drawing shall be updated according to the comments on the GA drawing.<br>-Approval is subject to approval of coordination package between multi-disciplines. |
| 25 | 93M-0407-ACC-60L11-DWG-90469-A | -Drawing shall be updated according to the comments on the GA drawing.<br>-Approval is subject to approval of coordination package between multi-disciplines. |
| 26 | 93M-0407-ACC-60L11-DWG-90470-A | -Drawing shall be updated according to the comments on the GA drawing.<br>-Approval is subject to approval of coordination package between multi-disciplines. |
| 27 | 93M-0407-ACC-60L11-DWG-90471-A | -Drawing shall be updated according to the comments on the GA drawing.<br>-Approval is subject to approval of coordination package between multi-disciplines. |
| 28 | 93M-0407-ACC-60L11-DWG-90472-A | -Drawing shall be updated according to the comments on the GA drawing.<br>-Approval is subject to approval of coordination package between multi-disciplines. |
| 29 | 93M-0407-ACC-60L11-DWG-90473-A | -Drawing shall be updated according to the comments on the GA drawing.<br>-Approval is subject to approval of coordination package between multi-disciplines. |
| 30 | 93M-0407-ACC-60L11-DWG-90474-A | -Drawing shall be updated according to the comments on the GA drawing.<br>-Approval is subject to approval of coordination package between multi-disciplines. |

| | | |
|---|---|---|
| 31 | 93M-0407-ACC-60L11-DWG-90475-A | -Drawing shall be updated according to the comments on the GA drawing.<br>-Approval is subject to approval of coordination package between multi-disciplines. |
| 32 | 93M-0407-ACC-60L11-DWG-90476-A | -Drawing shall be updated according to the comments on the GA drawing.<br>-Approval is subject to approval of coordination package between multi-disciplines. |
| 33 | 93M-0407-ACC-60L11-DWG-90477-A | -Drawing shall be updated according to the comments on the GA drawing.<br>-Approval is subject to approval of coordination package between multi-disciplines. |
| 34 | 93M-0407-ACC-60L11-DWG-90478-A | -Drawing shall be updated according to the comments on the GA drawing.<br>-Approval is subject to approval of coordination package between multi-disciplines. |
| 35 | 93M-0407-ACC-60L11-DWG-90479-A | -Drawing shall be updated according to the comments on the GA drawing.<br>-Approval is subject to approval of coordination package between multi-disciplines. |
| 36 | 93M-0407-ACC-60L11-DWG-90480-A | -Drawing shall be updated according to the comments on the GA drawing.<br>-Approval is subject to approval of coordination package between multi-disciplines. |
| 37 | 93M-0407-ACC-60L11-DWG-90481-A | -Drawing shall be updated according to the comments on the GA drawing.<br>-Approval is subject to approval of coordination package between multi-disciplines. |
| 38 | 93M-0407-ACC-60L11-DWG-90482-A | -Drawing shall be updated according to the comments on the GA drawing.<br>-Approval is subject to approval of coordination package between multi-disciplines. |
| 39 | 93M-0407-ACC-60L11-DWG-90483-A | -Drawing shall be updated according to the comments on the GA drawing.<br>-Approval is subject to approval of coordination package between multi-disciplines. |

| | | |
|---|---|---|
| 40 | 93M-0407-ACC-60L11-DWG-90484-A | -Drawing shall be updated according to the comments on the GA drawing.<br>-Approval is subject to approval of coordination package between multi-disciplines. |
| 41 | 93M-0407-ACC-60L11-DWG-90485-A | -Drawing shall be updated according to the comments on the GA drawing.<br>-Approval is subject to approval of coordination package between multi-disciplines. |
| 42 | 93M-0407-ACC-60L11-DWG-90486-A | -Drawing shall be updated according to the comments on the GA drawing.<br>-Approval is subject to approval of coordination package between multi-disciplines. |
| 43 | 93M-0407-ACC-60L11-DWG-90487-A | -Drawing shall be updated according to the comments on the GA drawing.<br>-Approval is subject to approval of coordination package between multi-disciplines. |
| 44 | 93M-0407-ACC-60L11-DWG-90488-A | -Drawing shall be updated according to the comments on the GA drawing.<br>-Approval is subject to approval of coordination package between multi-disciplines. |
| 45 | 93M-0407-ACC-60L11-DWG-90489-A | -Drawing shall be updated according to the comments on the GA drawing.<br>-Approval is subject to approval of coordination package between multi-disciplines. |
| 46 | 93M-0407-ACC-60L11-DWG-90490-A | -Drawing shall be updated according to the comments on the GA drawing.<br>-Approval is subject to approval of coordination package between multi-disciplines. |
| 47 | 93M-0407-ACC-60L11-DWG-90491-A | -Drawing shall be updated according to the comments on the GA drawing.<br>-Approval is subject to approval of coordination package between multi-disciplines. |
| 48 | 93M-0407-ACC-60L11-DWG-90492-A | -Drawing shall be updated according to the comments on the GA drawing.<br>-Approval is subject to approval of coordination package between multi-disciplines. |

| | | |
|---|---|---|
| 49 | 93M-0407-ACC-60L11-DWG-90493-A | -Drawing shall be updated according to the comments on the GA drawing.<br>-Approval is subject to approval of coordination package between multi-disciplines. |
| 50 | 93M-0407-ACC-60L11-DWG-90494-A | -Drawing shall be updated according to the comments on the GA drawing.<br>-Approval is subject to approval of coordination package between multi-disciplines. |
| 51 | 93M-0407-ACC-60L11-DWG-90495-A | -Drawing shall be updated according to the comments on the GA drawing.<br>-Approval is subject to approval of coordination package between multi-disciplines. |
| 52 | 93M-0407-ACC-60L11-DWG-90496-A | -Drawing shall be updated according to the comments on the GA drawing.<br>-Approval is subject to approval of coordination package between multi-disciplines. |
| 53 | 93M-0407-ACC-60L11-DWG-90497-A | -Drawing shall be updated according to the comments on the GA drawing.<br>-Approval is subject to approval of coordination package between multi-disciplines. |
| 54 | 93M-0407-ACC-60L11-DWG-90498-A | -Drawing shall be updated according to the comments on the GA drawing.<br>-Approval is subject to approval of coordination package between multi-disciplines. |
| 55 | 93M-0407-ACC-60L11-DWG-90499-A | -Drawing shall be updated according to the comments on the GA drawing.<br>-Approval is subject to approval of coordination package between multi-disciplines. |
| 56 | 93M-0407-ACC-60L11-DWG-90500-A | -Drawing shall be updated according to the comments on the GA drawing.<br>-Approval is subject to approval of coordination package between multi-disciplines. |
| 57 | 93M-0407-ACC-60L11-DWG-90501-A | -Drawing shall be updated according to the comments on the GA drawing.<br>-Approval is subject to approval of coordination package between multi-disciplines. |

| | | |
|---|---|---|
| 58 | 93M-0407-ACC-60L11-DWG-90502-A | -Drawing shall be updated according to the comments on the GA drawing.<br>-Approval is subject to approval of coordination package between multi-disciplines. |
| 59 | 93M-0407-ACC-60L11-DWG-90503-A | -Drawing shall be updated according to the comments on the GA drawing.<br>-Approval is subject to approval of coordination package between multi-disciplines. |
| 60 | 93M-0407-ACC-60L11-DWG-90504-A | -Drawing shall be updated according to the comments on the GA drawing.<br>-Approval is subject to approval of coordination package between multi-disciplines. |
| 61 | 93M-0407-ACC-60L11-DWG-90505-A | -Drawing shall be updated according to the comments on the GA drawing.<br>-Approval is subject to approval of coordination package between multi-disciplines. |
| 62 | 93M-0407-ACC-60L11-DWG-90506-A | -Drawing shall be updated according to the comments on the GA drawing.<br>-Approval is subject to approval of coordination package between multi-disciplines. |
| 63 | 93M-0407-ACC-60L11-DWG-90507-A | -Drawing shall be updated according to the comments on the GA drawing.<br>-Approval is subject to approval of coordination package between multi-disciplines. |
| 64 | 93M-0407-ACC-60L11-DWG-90508-A | -Drawing shall be updated according to the comments on the GA drawing.<br>-Approval is subject to approval of coordination package between multi-disciplines. |
| 65 | 93M-0407-ACC-60L11-DWG-90509-A | -Drawing shall be updated according to the comments on the GA drawing.<br>-Approval is subject to approval of coordination package between multi-disciplines. |
| 66 | 93M-0407-ACC-60L11-DWG-90510-A | -Drawing shall be updated according to the comments on the GA drawing.<br>-Approval is subject to approval of coordination package between multi-disciplines. |

| | | |
|---|---|---|
| 67 | 93M-0407-ACC-60L11-DWG-90511-A | -Drawing shall be updated according to the comments on the GA drawing.<br>-Approval is subject to approval of coordination package between multi-disciplines. |
| 68 | 93M-0407-ACC-60L11-DWG-90512-A | -Drawing shall be updated according to the comments on the GA drawing.<br>-Approval is subject to approval of coordination package between multi-disciplines. |
| 69 | 93M-0407-ACC-60L11-DWG-90513-A | -Drawing shall be updated according to the comments on the GA drawing.<br>-Approval is subject to approval of coordination package between multi-disciplines. |
| 70 | 93M-0407-ACC-60L11-DWG-90514-A | -Drawing shall be updated according to the comments on the GA drawing.<br>-Approval is subject to approval of coordination package between multi-disciplines. |
| 71 | 93M-0407-ACC-60L11-DWG-90515-A | -Drawing shall be updated according to the comments on the GA drawing.<br>-Approval is subject to approval of coordination package between multi-disciplines. |
| 72 | 93M-0407-ACC-60L11-DWG-90516-A | -Drawing shall be updated according to the comments on the GA drawing.<br>-Approval is subject to approval of coordination package between multi-disciplines. |
| 73 | 93M-0407-ACC-60L11-DWG-90517-A | -Drawing shall be updated according to the comments on the GA drawing.<br>-Approval is subject to approval of coordination package between multi-disciplines. |
| 74 | 93M-0407-ACC-60L11-DWG-90518-A | -Drawing shall be updated according to the comments on the GA drawing.<br>-Approval is subject to approval of coordination package between multi-disciplines. |
| 75 | 93M-0407-ACC-60L11-DWG-90519-A | -Drawing shall be updated according to the comments on the GA drawing.<br>-Approval is subject to approval of coordination package between multi-disciplines. |

| | | |
|---|---|---|
| 76 | 93M-0407-ACC-60L11-DWG-90520-A | -Drawing shall be updated according to the comments on the GA drawing.<br>-Approval is subject to approval of coordination package between multi-disciplines. |
| 77 | 93M-0407-ACC-60L11-DWG-90521-A | -Drawing shall be updated according to the comments on the GA drawing.<br>-Approval is subject to approval of coordination package between multi-disciplines. |
| 78 | 93M-0407-ACC-60L11-DWG-90522-A | -Drawing shall be updated according to the comments on the GA drawing.<br>-Approval is subject to approval of coordination package between multi-disciplines. |
| 79 | 93M-0407-ACC-60L11-DWG-90523-A | -Drawing shall be updated according to the comments on the GA drawing.<br>-Approval is subject to approval of coordination package between multi-disciplines. |
| 80 | 93M-0407-ACC-60L11-DWG-90524-A | -Drawing shall be updated according to the comments on the GA drawing.<br>-Approval is subject to approval of coordination package between multi-disciplines. |
| 81 | 93M-0407-ACC-60L11-DWG-90525-A | -Drawing shall be updated according to the comments on the GA drawing.<br>-Approval is subject to approval of coordination package between multi-disciplines. |
| 82 | 93M-0407-ACC-60L11-DWG-90526-A | -Drawing shall be updated according to the comments on the GA drawing.<br>-Approval is subject to approval of coordination package between multi-disciplines. |
| 83 | 93M-0407-ACC-60L11-DWG-90527-A | -Drawing shall be updated according to the comments on the GA drawing.<br>-Approval is subject to approval of coordination package between multi-disciplines. |
| 84 | 93M-0407-ACC-60L11-DWG-90528-A | -Drawing shall be updated according to the comments on the GA drawing.<br>-Approval is subject to approval of coordination package between multi-disciplines. |

| | | |
|---|---|---|
| 85 | 93M-0407-ACC-60L11-DWG-90529-A | -Drawing shall be updated according to the comments on the GA drawing.<br>-Approval is subject to approval of coordination package between multi-disciplines. |
| 86 | 93M-0407-ACC-60L11-DWG-90530-A | -Drawing shall be updated according to the comments on the GA drawing.<br>-Approval is subject to approval of coordination package between multi-disciplines. |
| 87 | 93M-0407-ACC-60L11-DWG-90531-A | -Drawing shall be updated according to the comments on the GA drawing.<br>-Approval is subject to approval of coordination package between multi-disciplines. |
| 88 | 93M-0407-ACC-60L11-DWG-90532-A | -Drawing shall be updated according to the comments on the GA drawing.<br>-Approval is subject to approval of coordination package between multi-disciplines. |
| 89 | 93M-0407-ACC-60L11-DWG-90533-A | -Drawing shall be updated according to the comments on the GA drawing.<br>-Approval is subject to approval of coordination package between multi-disciplines. |
| 90 | 93M-0407-ACC-60L11-DWG-90534-A | -Drawing shall be updated according to the comments on the GA drawing.<br>-Approval is subject to approval of coordination package between multi-disciplines. |
| 91 | 93M-0407-ACC-60L11-DWG-90535-A | -Drawing shall be updated according to the comments on the GA drawing.<br>-Approval is subject to approval of coordination package between multi-disciplines. |
| 92 | 93M-0407-ACC-60L11-DWG-90536-A | -Drawing shall be updated according to the comments on the GA drawing.<br>-Approval is subject to approval of coordination package between multi-disciplines. |
| 93 | 93M-0407-ACC-60L11-DWG-90537-A | -Drawing shall be updated according to the comments on the GA drawing.<br>-Approval is subject to approval of coordination package between multi-disciplines. |

| | | |
|---|---|---|
| 94 | 93M-0407-ACC-60L11-DWG-90538-A | -Drawing shall be updated according to the comments on the GA drawing.<br>-Approval is subject to approval of coordination package between multi-disciplines. |
| 95 | 93M-0407-ACC-60L11-DWG-90539-A | -Drawing shall be updated according to the comments on the GA drawing.<br>-Approval is subject to approval of coordination package between multi-disciplines. |
| 96 | 93M-0407-ACC-60L11-DWG-90540-A | -Drawing shall be updated according to the comments on the GA drawing.<br>-Approval is subject to approval of coordination package between multi-disciplines. |
| 97 | 93M-0407-ACC-60L11-DWG-90541-A | -Drawing shall be updated according to the comments on the GA drawing.<br>-Approval is subject to approval of coordination package between multi-disciplines. |
| 98 | 93M-0407-ACC-60L11-DWG-90542-A | -Drawing shall be updated according to the comments on the GA drawing.<br>-Approval is subject to approval of coordination package between multi-disciplines. |
| 99 | 93M-0407-ACC-60L11-DWG-90543-A | -Drawing shall be updated according to the comments on the GA drawing.<br>-Approval is subject to approval of coordination package between multi-disciplines. |
| 100 | 93M-0407-ACC-60L11-DWG-90544-A | -Drawing shall be updated according to the comments on the GA drawing.<br>-Approval is subject to approval of coordination package between multi-disciplines. |
| 101 | 93M-0407-ACC-60L11-DWG-90545-A | -Drawing shall be updated according to the comments on the GA drawing.<br>-Approval is subject to approval of coordination package between multi-disciplines. |
| 102 | 93M-0407-ACC-60L11-DWG-90546-A | -Drawing shall be updated according to the comments on the GA drawing.<br>-Approval is subject to approval of coordination package between multi-disciplines. |

| | | |
|---|---|---|
| 103 | 93M-0407-ACC-60L11-DWG-90547-A | -Drawing shall be updated according to the comments on the GA drawing.<br>-Approval is subject to approval of coordination package between multi-disciplines. |
| 104 | 93M-0407-ACC-60L11-DWG-90548-A | -Drawing shall be updated according to the comments on the GA drawing.<br>-Approval is subject to approval of coordination package between multi-disciplines. |
| 105 | 93M-0407-ACC-60L11-DWG-90549-A | -Drawing shall be updated according to the comments on the GA drawing.<br>-Approval is subject to approval of coordination package between multi-disciplines. |
| 106 | 93M-0407-ACC-60L11-DWG-90550-A | -Drawing shall be updated according to the comments on the GA drawing.<br>-Approval is subject to approval of coordination package between multi-disciplines. |
| 107 | 93M-0407-ACC-60L11-DWG-90551-A | -Drawing shall be updated according to the comments on the GA drawing.<br>-Approval is subject to approval of coordination package between multi-disciplines. |
| 108 | 93M-0407-ACC-60L11-DWG-90552-A | -Drawing shall be updated according to the comments on the GA drawing.<br>-Approval is subject to approval of coordination package between multi-disciplines. |
| 109 | 93M-0407-ACC-60L11-DWG-90553-A | -Drawing shall be updated according to the comments on the GA drawing.<br>-Approval is subject to approval of coordination package between multi-disciplines. |
| 110 | 93M-0407-ACC-60L11-DWG-90554-A | -Drawing shall be updated according to the comments on the GA drawing.<br>-Approval is subject to approval of coordination package between multi-disciplines. |
| 111 | 93M-0407-ACC-60L11-DWG-90555-A | -Drawing shall be updated according to the comments on the GA drawing.<br>-Approval is subject to approval of coordination package between multi-disciplines. |

| | | |
|---|---|---|
| 112 | 93M-0407-ACC-60L11-DWG-90556-A | -Drawing shall be updated according to the comments on the GA drawing.<br>-Approval is subject to approval of coordination package between multi-disciplines. |
| 113 | 93M-0407-ACC-60L11-DWG-90557-A | -Drawing shall be updated according to the comments on the GA drawing.<br>-Approval is subject to approval of coordination package between multi-disciplines. |
| 114 | 93M-0407-ACC-60L11-DWG-90558-A | -Drawing shall be updated according to the comments on the GA drawing.<br>-Approval is subject to approval of coordination package between multi-disciplines. |
| 115 | 93M-0407-ACC-60L11-DWG-90559-A | -Drawing shall be updated according to the comments on the GA drawing.<br>-Approval is subject to approval of coordination package between multi-disciplines. |
| 116 | 93M-0407-ACC-60L11-DWG-90560-A | -Drawing shall be updated according to the comments on the GA drawing.<br>-Approval is subject to approval of coordination package between multi-disciplines. |
| 117 | 93M-0407-ACC-60L11-DWG-90561-A | -Drawing shall be updated according to the comments on the GA drawing.<br>-Approval is subject to approval of coordination package between multi-disciplines. |
| 118 | 93M-0407-ACC-60L11-DWG-90562-A | -Drawing shall be updated according to the comments on the GA drawing.<br>-Approval is subject to approval of coordination package between multi-disciplines. |
| 119 | 93M-0407-ACC-60L11-DWG-90563-A | -Drawing shall be updated according to the comments on the GA drawing.<br>-Approval is subject to approval of coordination package between multi-disciplines. |
| 120 | 93M-0407-ACC-60L11-DWG-90564-A | -Drawing shall be updated according to the comments on the GA drawing.<br>-Approval is subject to approval of coordination package between multi-disciplines. |

| | | |
|---|---|---|
| 121 | 93M-0407-ACC-60L11-DWG-90565-A | -Drawing shall be updated according to the comments on the GA drawing.<br>-Approval is subject to approval of coordination package between multi-disciplines. |
| 122 | 93M-0407-ACC-60L11-DWG-90566-A | -Drawing shall be updated according to the comments on the GA drawing.<br>-Approval is subject to approval of coordination package between multi-disciplines. |
| 123 | 93M-0407-ACC-60L11-DWG-90567-A | -Drawing shall be updated according to the comments on the GA drawing.<br>-Approval is subject to approval of coordination package between multi-disciplines. |
| 124 | 93M-0407-ACC-60L11-DWG-90568-A | -Drawing shall be updated according to the comments on the GA drawing.<br>-Approval is subject to approval of coordination package between multi-disciplines. |
| 125 | 93M-0407-ACC-60L11-DWG-90569-A | -Drawing shall be updated according to the comments on the GA drawing.<br>-Approval is subject to approval of coordination package between multi-disciplines. |
| 126 | 93M-0407-ACC-60L11-DWG-90570-A | -Drawing shall be updated according to the comments on the GA drawing.<br>-Approval is subject to approval of coordination package between multi-disciplines. |
| 127 | 93M-0407-ACC-60L11-DWG-90571-A | -Drawing shall be updated according to the comments on the GA drawing.<br>-Approval is subject to approval of coordination package between multi-disciplines. |
| 128 | 93M-0407-ACC-60L11-DWG-90572-A | -Drawing shall be updated according to the comments on the GA drawing.<br>-Approval is subject to approval of coordination package between multi-disciplines. |
| 129 | 93M-0407-ACC-60L11-DWG-90573-A | -Drawing shall be updated according to the comments on the GA drawing.<br>-Approval is subject to approval of coordination package between multi-disciplines. |

| | | |
|---|---|---|
| 130 | 93M-0407-ACC-60L11-DWG-90574-A | -Drawing shall be updated according to the comments on the GA drawing.<br>-Approval is subject to approval of coordination package between multi-disciplines. |
| 131 | 93M-0407-ACC-60L11-DWG-90575-A | -Drawing shall be updated according to the comments on the GA drawing.<br>-Approval is subject to approval of coordination package between multi-disciplines. |
| 132 | 93M-0407-ACC-60L11-DWG-90576-A | -Drawing shall be updated according to the comments on the GA drawing.<br>-Approval is subject to approval of coordination package between multi-disciplines. |
| 133 | 93M-0407-ACC-60L11-DWG-90577-A | -Drawing shall be updated according to the comments on the GA drawing.<br>-Approval is subject to approval of coordination package between multi-disciplines. |
| 134 | 93M-0407-ACC-60L11-DWG-90578-A | -Drawing shall be updated according to the comments on the GA drawing.<br>-Approval is subject to approval of coordination package between multi-disciplines. |
| 135 | 93M-0407-ACC-60L11-DWG-90579-A | -Drawing shall be updated according to the comments on the GA drawing.<br>-Approval is subject to approval of coordination package between multi-disciplines. |
| 136 | 93M-0407-ACC-60L11-DWG-90580-A | -Drawing shall be updated according to the comments on the GA drawing.<br>-Approval is subject to approval of coordination package between multi-disciplines. |
| 137 | 93M-0407-ACC-60L11-DWG-90581-A | -Drawing shall be updated according to the comments on the GA drawing.<br>-Approval is subject to approval of coordination package between multi-disciplines. |
| 138 | 93M-0407-ACC-60L11-DWG-90582-A | -Drawing shall be updated according to the comments on the GA drawing.<br>-Approval is subject to approval of coordination package between multi-disciplines. |

| | | |
|---|---|---|
| 139 | 93M-0407-ACC-60L11-DWG-90583-A | -Drawing shall be updated according to the comments on the GA drawing.<br>-Approval is subject to approval of coordination package between multi-disciplines. |
| 140 | 93M-0407-ACC-60L11-DWG-90584-A | -Drawing shall be updated according to the comments on the GA drawing.<br>-Approval is subject to approval of coordination package between multi-disciplines. |
| 141 | 93M-0407-ACC-60L11-DWG-90585-A | -Drawing shall be updated according to the comments on the GA drawing.<br>-Approval is subject to approval of coordination package between multi-disciplines. |
| 142 | 93M-0407-ACC-60L11-DWG-90586-A | -Drawing shall be updated according to the comments on the GA drawing.<br>-Approval is subject to approval of coordination package between multi-disciplines. |
| 143 | 93M-0407-ACC-60L11-DWG-90587-A | -Drawing shall be updated according to the comments on the GA drawing.<br>-Approval is subject to approval of coordination package between multi-disciplines. |
| 144 | 93M-0407-ACC-60L11-DWG-90588-A | -Drawing shall be updated according to the comments on the GA drawing.<br>-Approval is subject to approval of coordination package between multi-disciplines. |
| 145 | 93M-0407-ACC-60L11-DWG-90589-A | -Drawing shall be updated according to the comments on the GA drawing.<br>-Approval is subject to approval of coordination package between multi-disciplines. |
| 146 | 93M-0407-ACC-60L11-DWG-90590-A | -Drawing shall be updated according to the comments on the GA drawing.<br>-Approval is subject to approval of coordination package between multi-disciplines. |
| 147 | 93M-0407-ACC-60L11-DWG-90591-A | -Drawing shall be updated according to the comments on the GA drawing.<br>-Approval is subject to approval of coordination package between multi-disciplines. |

| | | |
|---|---|---|
| 148 | 93M-0407-ACC-60L11-DWG-90592-A | -Drawing shall be updated according to the comments on the GA drawing.<br>-Approval is subject to approval of coordination package between multi-disciplines. |
| 149 | 93M-0407-ACC-60L11-DWG-90593-A | -Drawing shall be updated according to the comments on the GA drawing.<br>-Approval is subject to approval of coordination package between multi-disciplines. |

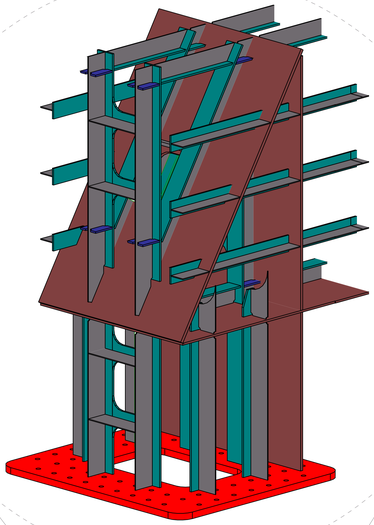

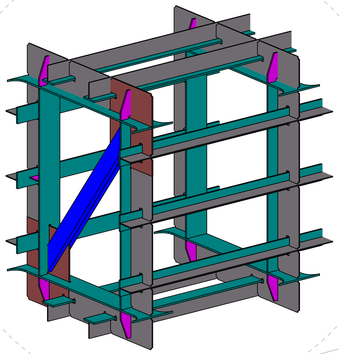

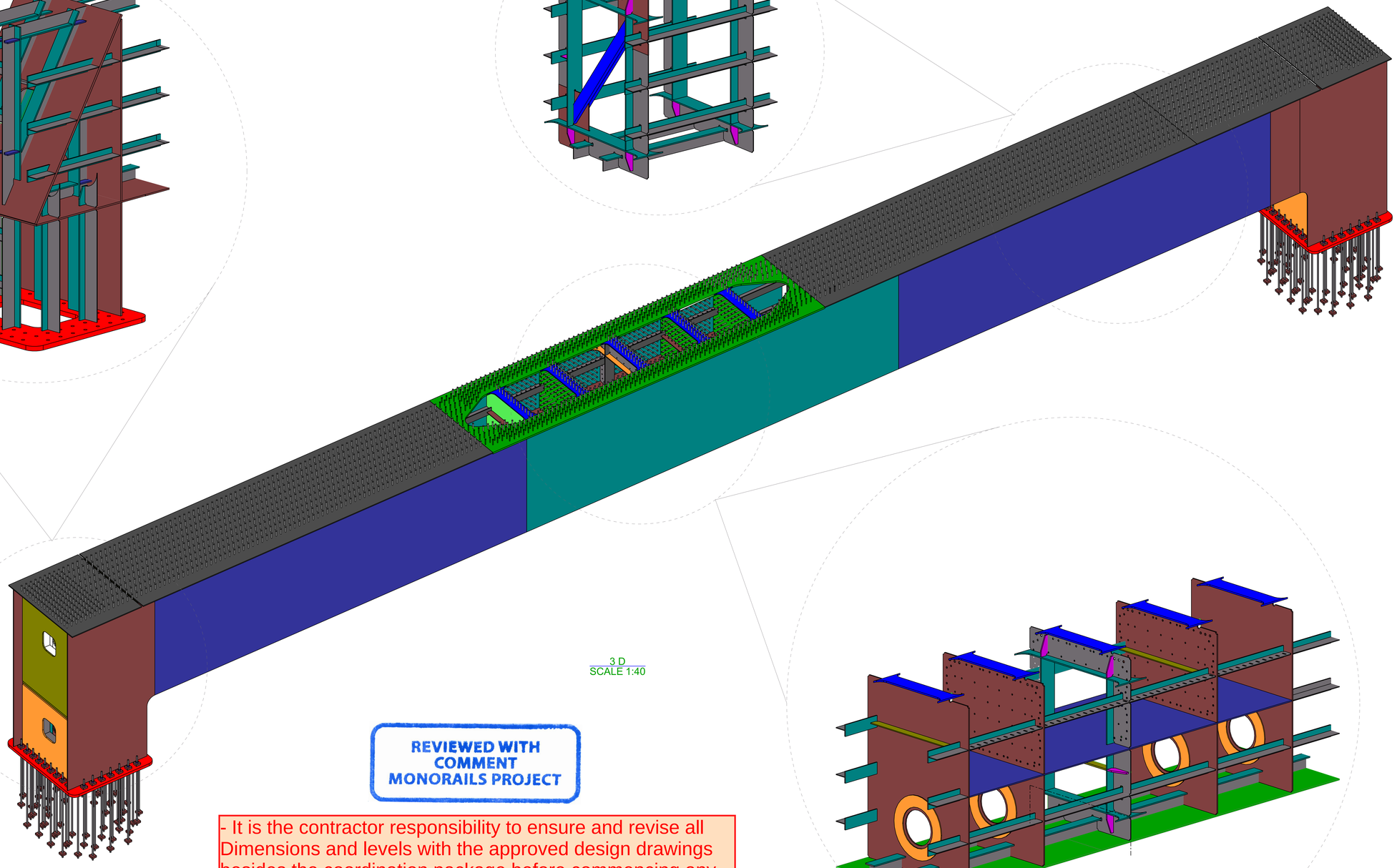

3 D
SCALE 1:40

REVIEWED WITH COMMENT
MONORAILS PROJECT

- It is the contractor responsibility to ensure and revise all Dimensions and levels with the approved design drawings besides the coordination package before commencing any site Works.

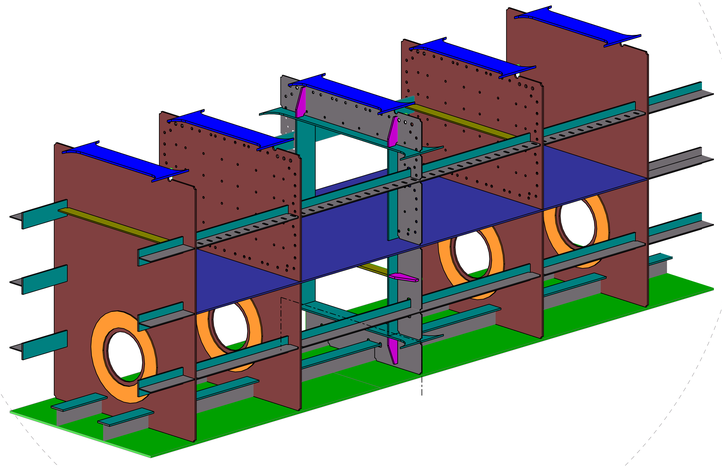

6 October Monorail
Engineering Unit
Valid For Construction

## GENERAL NOTES:

1. ALL DIMENSIONS ARE IN MILLIMETERS UNLESS OTHERWISE SPECIFIED.
2. LEVELS ARE IN METERS
3. DESIGN SERVICE LIFE OF 100 YEARS.
4. FLANGES OF TOP AND BOTTOM CHORDS TO BE SUPPLIED WITH IMPROVED THROUGH THICKNESS PROPERTIES Z25 ACCORDING TO EN10164.

REFERENCE DRAWINGS

| | |
|---|---|
| 1 | 93M-BOA-NAT-LOT-26612 |
| 2 | |
| 3 | |
| 4 | |
| 5 | |
| 6 | |
| 7 | |
| 8 | |
| 9 | |
| 10 | |
| 11 | |

6TH OF OCTOBER CITY RAIL TRANSIT MONORAIL &
NEW CAPITAL CITY RAIL TRANSIT MONORAIL

The Authority
Hill International
Authority Consultant

ORASCOM CONSTRUCTION
BOMBARDIER
Main Contractor

SENER
SHAKER CONSULTANCY GROUP
Designer

CONTRACTOR
CONSULTANT
ENGINEERING HOUSE FOR CONSULTANCY

SCALE: AS SHOWN
SHOP DRAWING
DATE: 20.11.2024

| REV | DATE | BY | DESCRIPTION | CHK | APD |
|---|---|---|---|---|---|
| A | 20-11-24 | E.SH | ISSUE FOR APPROVAL | A.SH | M.M |

DRAWING TITLE:
6TH OF OCTOBER MONORAIL
SHOP DRAWING FOR STRADDLE BENT 6OL11-22C2
STEEL RAFTER.
3D-VIEW

| Project Code | Rubric | Initiator | Lot | Ref | Number | Revision |
|---|---|---|---|---|---|---|
| 93M | 0407 | ACC | 60L11 | DWG | 90445 | A |

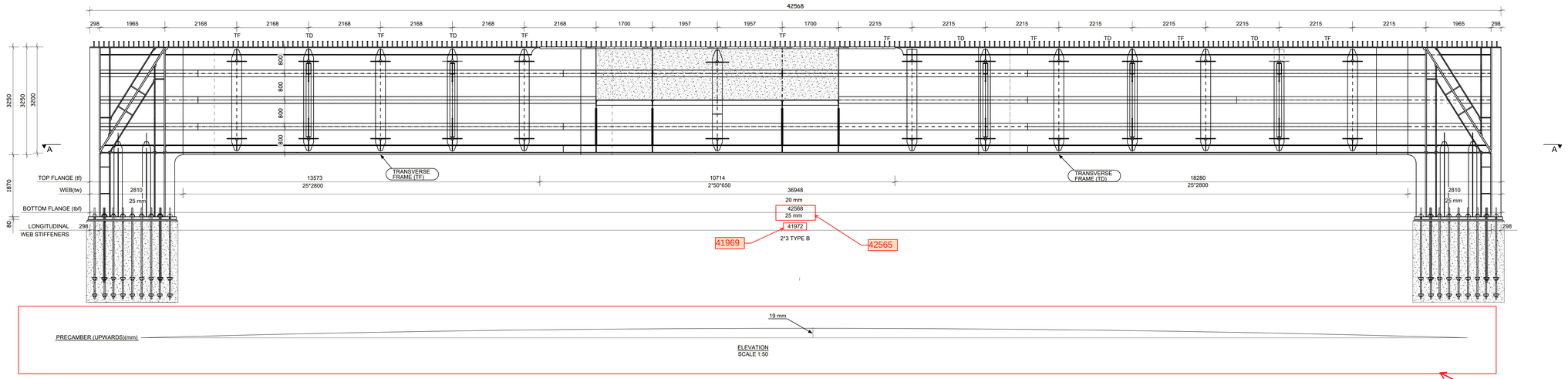


-Please check apply camber at assembly drawing .

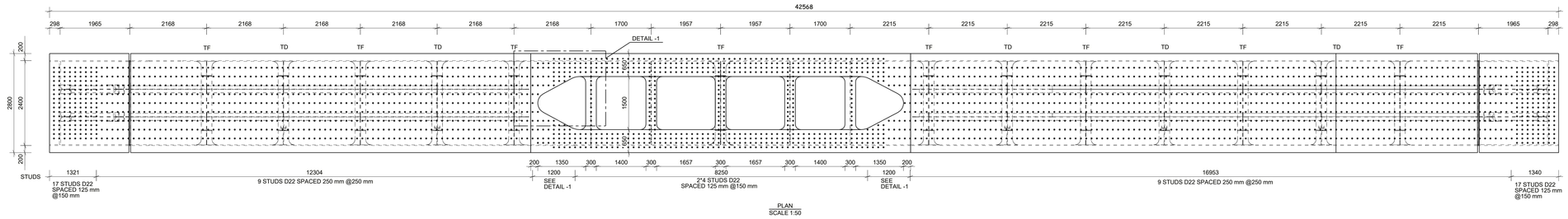


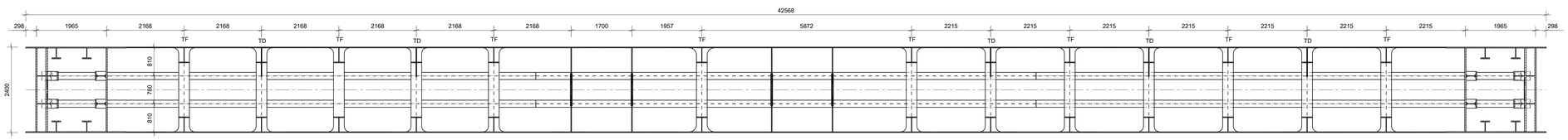


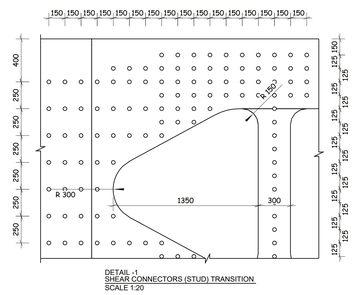


REVIEWED WITH COMMENT
MONORAILS PROJECT

-Approval is subject to approval of coordination package between multi-disciplines.

| FILLET WELDS |
|---|
| - UNLESS NOTED OTHERWISE, ALL FILLET WELDS SHALL BE CONTINUOUS.<br>- FILLET WELDS SHALL BE MADE FROM BOTH SIDES (SYMMETRICAL BEADS).<br>- EFFECTIVE THROAT THICKNESSES ARE DEFINED (THEY SHOULD BE MULTIPLIED BY 1.41 TO GET THE LEG LENGTHS). |
| **GROOVE WELDS** |
| - ALL GROOVE WELDS SHALL BE MADE COMPLETE JOINT PENETRATION (CJP). BUTT JOINTS SHALL BE MADE WITH RUN-OFF PLATES. RUN-OFF PLATES SHALL BE REMOVED AFTER WELDING, GROUNDING THE EDGE IN THE DIRECTION OF STRESSES. |
| - STEEL TO BE PAINTED IN ACCORDANCE WITH PROJECT SPECIFICATIONS. (CORROSIVITY CATEGORY C4 DURABILITY VERY HIGH)<br>- QUALITY CONTROL IN ACCORDANCE WITH PROJECT SPECIFICATIONS. (EXECUTION LEVEL EXC4 ACCORDING TO EN 1090-2:2018) |

| CONCRETE ELEMENT | f'c (MPa) CYLINDER / CUBIC | CONCRETE COVER (mm) |
|---|---|---|
| PILES | 35/45 | 75 |
| PIERS | 35/45 | 50 |
| STRADDLE BENT HEADSTOCK CAST IN SITU ZONE | 40/50 | 50 |

| STEEL | STEEL GRADE |
|---|---|
| REINFORCING STEEL | B500DWR |
| STRUCTURAL STEEL (t≤40mm) | S355J2N [EN 10025 : 2018] |
| STRUCTURAL STEEL (t>40mm) | S355K2N [EN 10025 : 2018] |
| SHAPES (UPN 200) | S355J0N [EN 10025 : 2018] |
| SHEAR CONNECTOR - STUD Ø22 h=175mm S235J2G3+C450 ST37-3K DIN17100 | |

## GENERAL NOTES:

1. ALL DIMENSIONS ARE IN MILLIMETERS UNLESS OTHERWISE SPECIFIED.
2. LEVELS ARE IN METERS
3. DESIGN SERVICE LIFE OF 100 YEARS.
4. FLANGES OF TOP AND BOTTOM CHORDS TO BE SUPPLIED WITH IMPROVED THROUGH THICKNESS PROPERTIES Z25 ACCORDING TO EN10164.

REFERENCE DRAWINGS

| | |
|---|---|
| 1 | 93M-BOA-NAT-LOT-26612 |
| 2 | |
| 3 | |
| 4 | |
| 5 | |
| 6 | |
| 7 | |
| 8 | |
| 9 | |
| 10 | |
| 11 | |

6TH OF OCTOBER CITY RAIL TRANSIT MONORAIL &
NEW CAPITAL CITY RAIL TRANSIT MONORAIL

The Authority — Hill International Authority Consultant

Main Contractor: ORASCOM CONSTRUCTION — BOMBARDIER

Designer: SENER — SHAKER CONSULTANCY GROUP

6 October Monorail
Engineering Unit
Valid For Construction

CONTRACTOR
CONSULTANT
ENGINEERING HOUSE FOR CONSULTANCY

SCALE: AS SHOWN | SHOP DRAWING | DATE: 20.11.2024

| REV | DATE | BY | DESCRIPTION | CHK | APD |
|---|---|---|---|---|---|
| A | 20-11-24 | E.SH | ISSUE FOR APPROVAL | A.SH | M.M |

DRAWING TITLE:
6TH OF OCTOBER MONORAIL
**SHOP DRAWING FOR STRADDLE BENT 6OL11-22C2**
**STEEL RAFTER.**
GENERAL LAYOUT

| Project Code | Rubric | Initiator | Lot | Ref | Number | Revision |
|---|---|---|---|---|---|---|
| 9 3 | M 0 4 0 7 | A C C | 6 0 L 1 1 | D W G | 90446 | A |

Data Routines

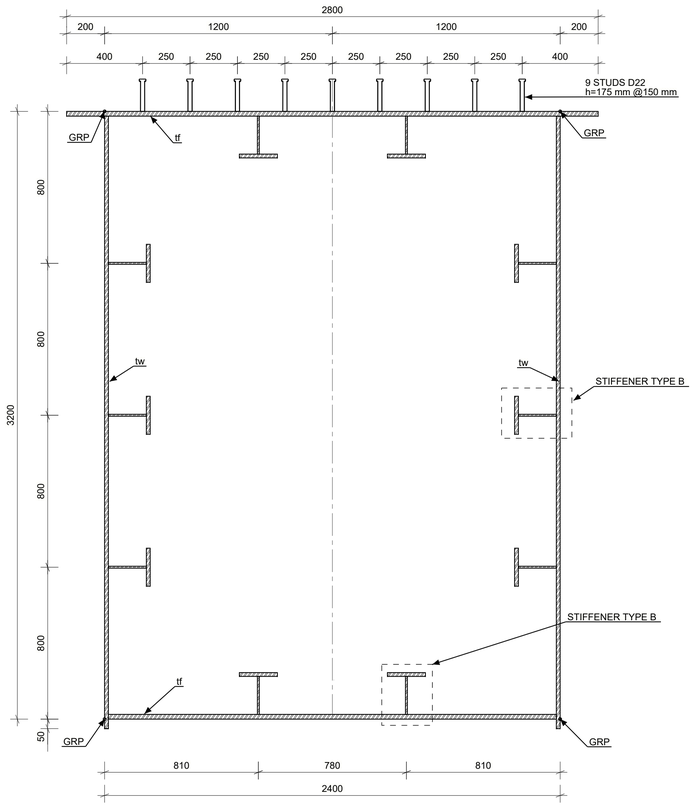


TYPICAL CROSS SECTION
SCALE 1:15

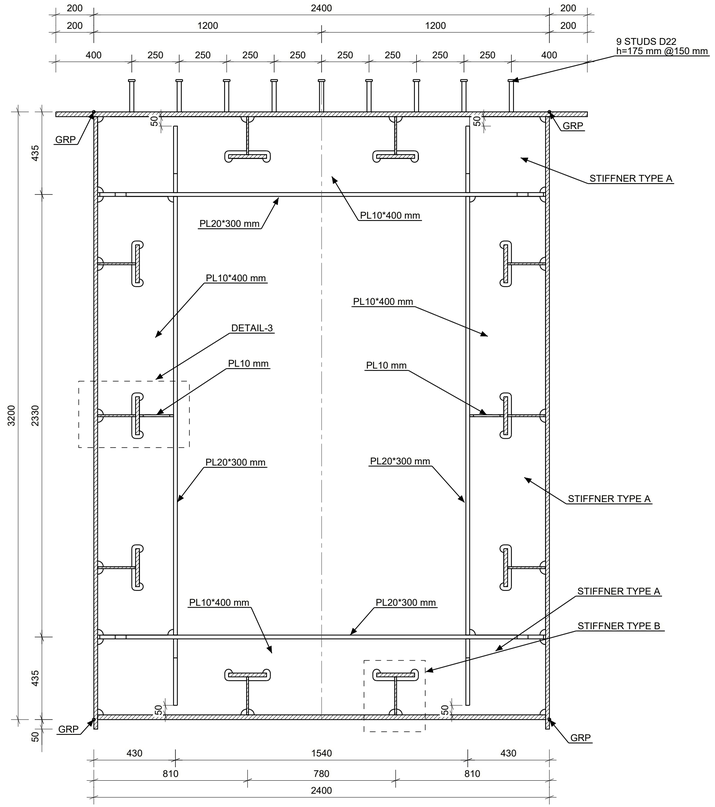


TRANSVERSE FRAME (TF) CROSS SECTION
SCALE 1:15

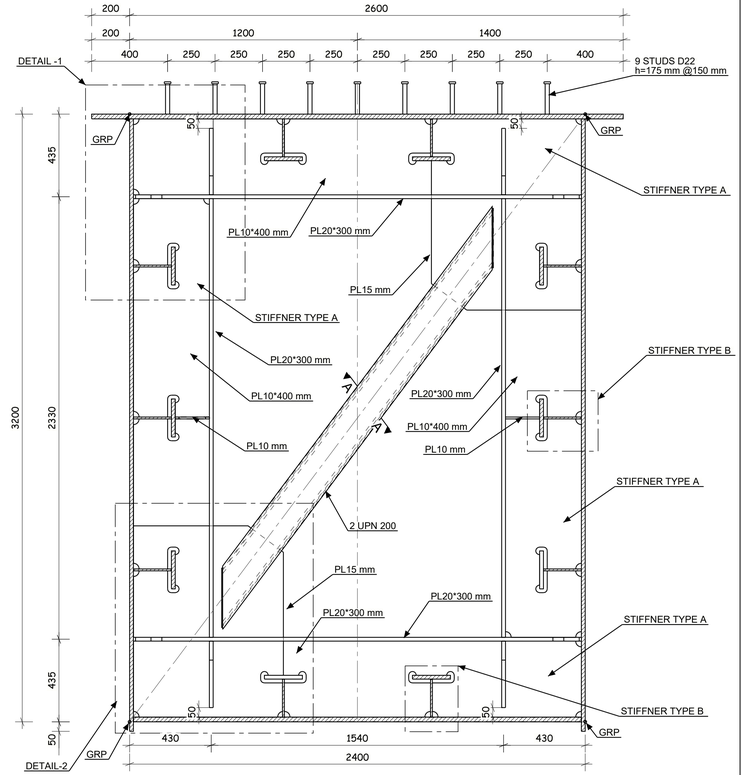


TRANSVERSE DIAPHRAGM (TD) CROSS SECTION
SCALE 1:15

NOTE
GRP: GEOMETRY REFERENCE ROINT

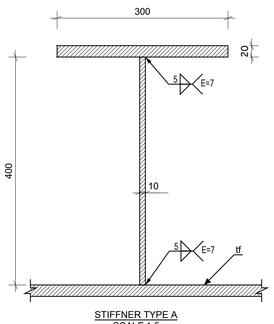


STIFFNER TYPE A
SCALE 1:5

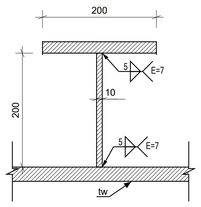


STIFFNER TYPE B
SCALE 1:5

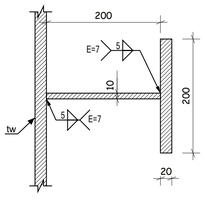


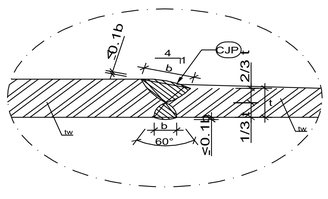


TYPICAL BUTT WELDED JOINT
SCALE 1:4

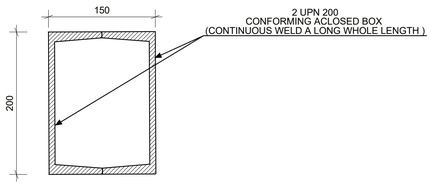


SECTION (A-A)
SCALE 1:4

REVIEWED WITH COMMENT
MONORAILS PROJECT

-Approval is subject to approval of coordination package between multi-disciplines.

| CONCRETE ELEMENT | f'c (MPa) CYLINDER / CUBIC | CONCRETE COVER (mm) |
|---|---|---|
| PILES | 35/45 | 75 |
| PIERS | 35/45 | 50 |
| STRADDLE BENT HEADSTOCK CAST IN SITU ZONE | 40/50 | 50 |

| STEEL | STEEL GRADE |
|---|---|
| REINFORCING STEEL | B500DWR |
| STRUCTURAL STEEL (t≤40mm) | S355J2N [EN 10025 : 2018] |
| STRUCTURAL STEEL (t>40mm) | S355K2N [EN 10025 : 2018] |
| SHAPES (UPN 200) | S355J0N [EN 10025 : 2018] |
| SHEAR CONNECTOR - STUD Ø22 h=175mm S235J2G3+C450 ST37-3K DIN17100 | |

| SYMBOL | DESCRIPTION |
|---|---|
| e | FILLET WELD OF EFFECTIVE THROAT THICKNESS (e)mm. |
| e | FILLET WELD OF EFFECTIVE THROAT THICKNESS (e)mm, BOTH SIDES. |
| PP | PARTIAL PENETRATION WELD. |
| CJP | COMPLETE JOINT PENETRATION. |
| UT | ALL GROUND WELD. |
| UT-x% | FIELD WELD. |
| | ULTRASONIC TEST AT x%. |

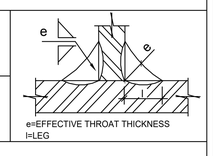


6 October Monorail
Engineering Unit
Valid For Construction

## GENERAL NOTES:

1. ALL DIMENSIONS ARE IN MILLIMETERS UNLESS OTHERWISE SPECIFIED.
2. LEVELS ARE IN METERS
3. DESIGN SERVICE LIFE OF 100 YEARS.
4. FLANGES OF TOP AND BOTTOM CHORDS TO BE SUPPLIED WITH IMPROVED THROUGH THICKNESS PROPERTIES Z25 ACCORDING TO EN10164.

REFERENCE DRAWINGS

| | |
|---|---|
| 1 | 93M-BOA-NAT-LOT-26612 |
| 2 | |
| 3 | |
| 4 | |
| 5 | |
| 6 | |
| 7 | |
| 8 | |
| 9 | |
| 10 | |
| 11 | |

6TH OF OCTOBER CITY RAIL TRANSIT MONORAIL &
NEW CAPITAL CITY RAIL TRANSIT MONORAIL

The Authority
Hill International
Authority Consultant

ORASCOM CONSTRUCTION
BOMBARDIER
Main Contractor

SENER
SHAKER CONSULTANCY GROUP
Designer

CONTRACTOR
CONSULTANT:
EHC
ENGINEERING HOUSE FOR CONSULTANCY

| REV | DATE | BY | DESCRIPTION | CHK | APD |
|---|---|---|---|---|---|
| A | 20-11-24 | E.SH | ISSUE FOR APPROVAL | A.SH | M.M |

SCALE
AS SHOWN

SHOP DRAWING

DATE
1-Dec-24

DRAWING TITLE:
6TH OF OCTOBER MONORAIL
**SHOP DRAWING FOR STRADDLE BENT 6OL11-22C2**
**STEEL RAFTER.**
SECTIONS DETAILS.01

| Project Code | Rubric | Initiator | Lot | Ref | Number | Revision |
|---|---|---|---|---|---|---|
| 9 3 | M 0 4 0 7 | A C C | 6 0 L 1 1 | D W G | 90447 | A |

Tekla Structures

REVIEWED WITH COMMENT
MONORAILS PROJECT

-Approval is subject to approval of coordination package between multi-disciplines.

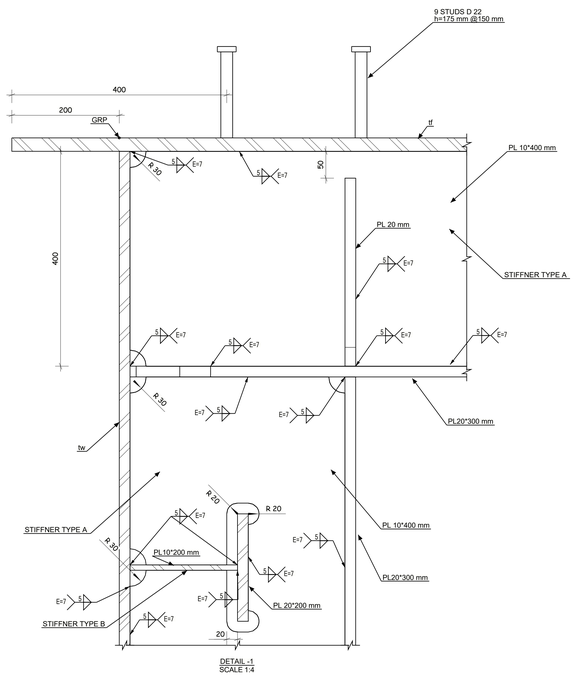


DETAIL -1
SCALE 1:4

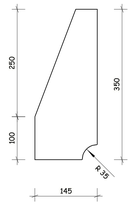


NOTE
GRP : GEOMETRY REFRENCE POINT

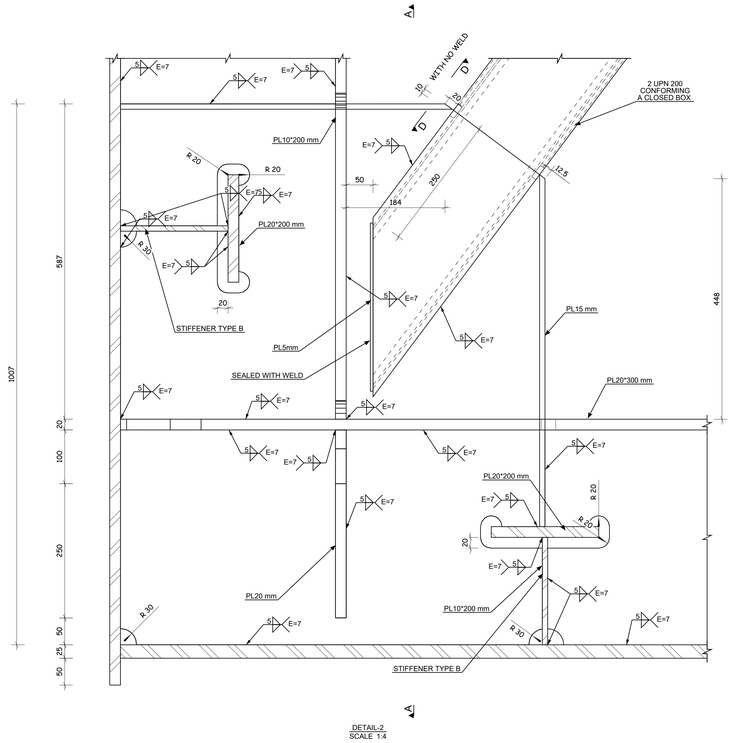


DETAIL-2
SCALE 1:4

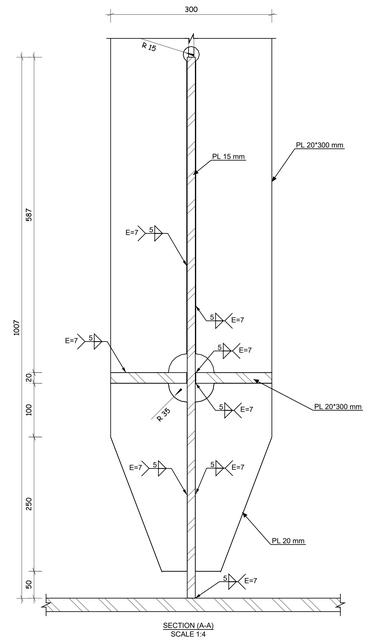


SECTION (A-A)
SCALE 1:4

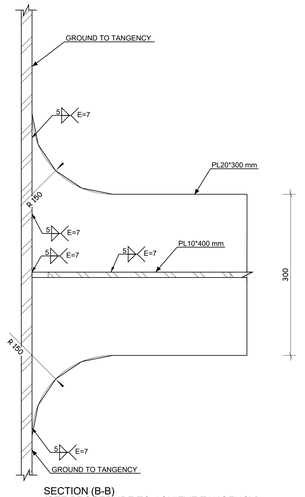


SECTION (B-B)
(SEE PROCEDURE TO ACHIEVE TANGENCY)
SCALE 1:4

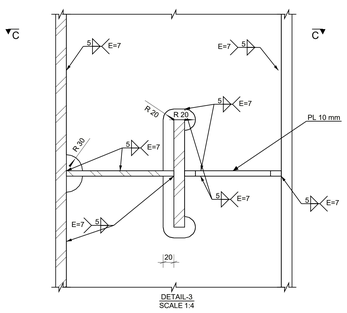


DETAIL-3
SCALE 1:4

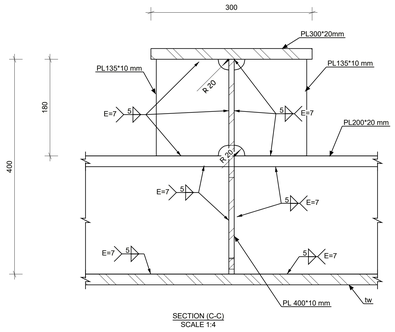


SECTION (C-C)
SCALE 1:4

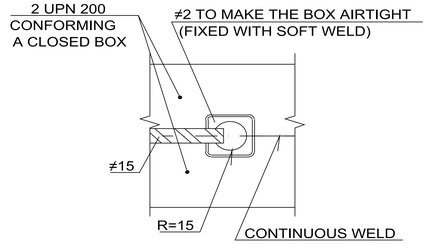


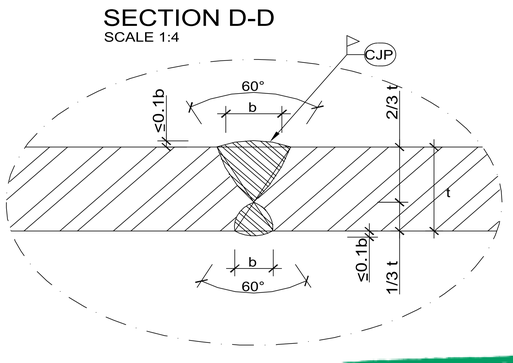


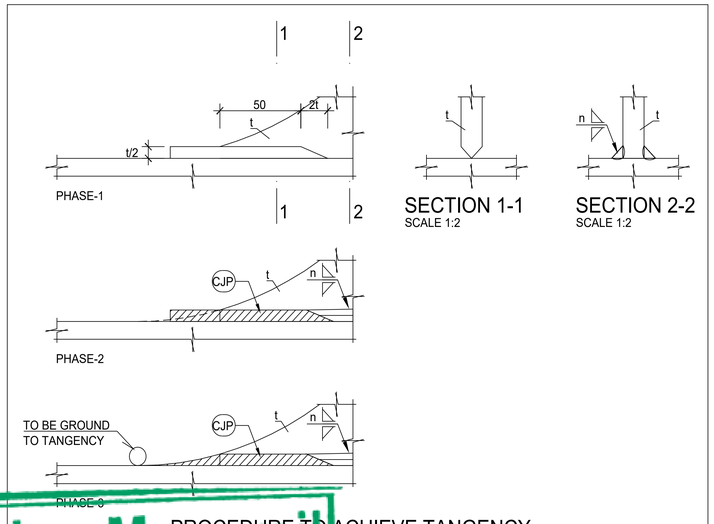


## GENERAL NOTES:

1. ALL DIMENSIONS ARE IN MILLIMETERS UNLESS OTHERWISE SPECIFIED.
2. LEVELS ARE IN METERS
3. DESIGN SERVICE LIFE OF 100 YEARS.
4. FLANGES OF TOP AND BOTTOM CHORDS TO BE SUPPLIED WITH IMPROVED THROUGH THICKNESS PROPERTIES Z25 ACCORDING TO EN10164.

REFERENCE DRAWINGS

| | |
|---|---|
| 1 | 93M-BOA-NAT-LOT-26612 |
| 2 | |
| 3 | |
| 4 | |
| 5 | |
| 6 | |
| 7 | |
| 8 | |
| 9 | |
| 10 | |
| 11 | |

6TH OF OCTOBER CITY RAIL TRANSIT MONORAIL &
NEW CAPITAL CITY RAIL TRANSIT MONORAIL

The Authority
Hill International
Authority Consultant
ORASCOM CONSTRUCTION
Main Contractor
BOMBARDIER
SENER
SHAKER CONSULTING GROUP
Designer

CONTRACTOR
CONSULTANT
ENGINEERING HOUSE FOR CONSULTANCY

SCALE: AS SHOWN | SHOP DRAWING | DATE: 20.11.2024

| REV | DATE | BY | DESCRIPTION | CHK | APD |
|---|---|---|---|---|---|
| A | 20-11-24 | E.SH | ISSUE FOR APPROVAL | A.SH | M.M |

6 October Monorail
Engineering Unit
Valid For Construction

DRAWING TITLE:
6TH OF OCTOBER MONORAIL
**SHOP DRAWING FOR STRADDLE BENT 6OL11-22C2**
**STEEL RAFTER.**
SECTIONS DETAILS.02

| Project Code | Rubric | Initiator | Lot | Ref | Number | Revision |
|---|---|---|---|---|---|---|
| 9 3 | M 0 4 0 7 | A C C | 6 0 L 1 1 | D W G | 90448 | A |

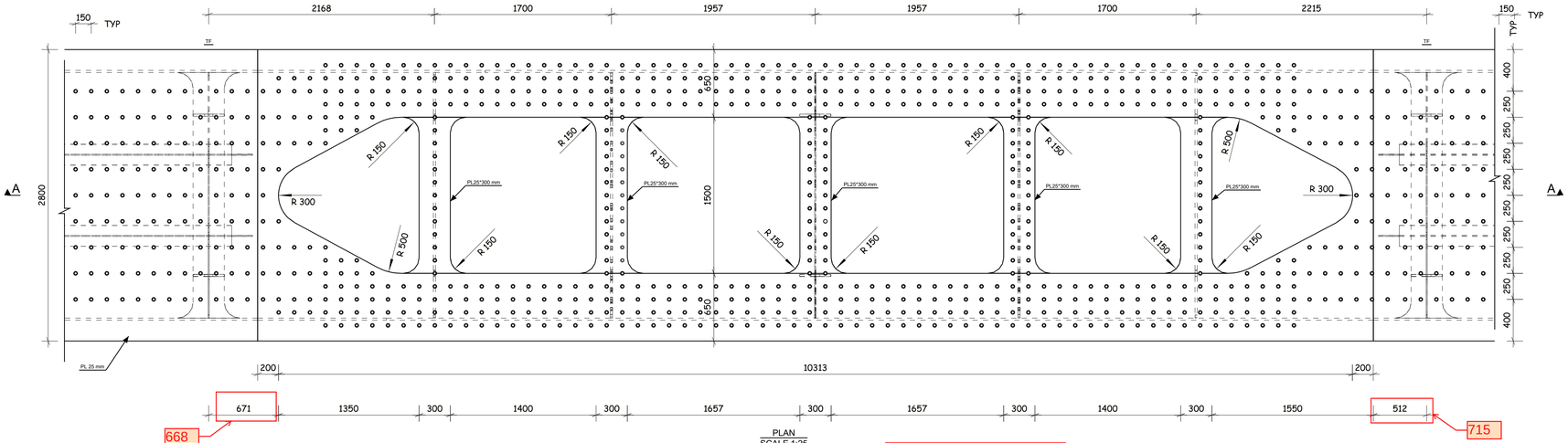


PLAN
SCALE 1:25

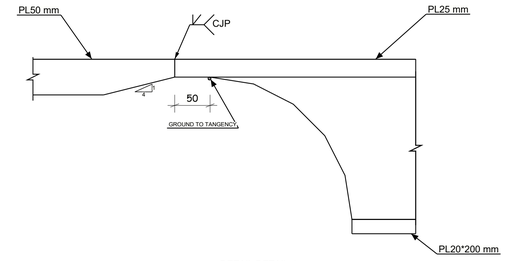


DETAIL DETAIL-1

Please clarify SEC

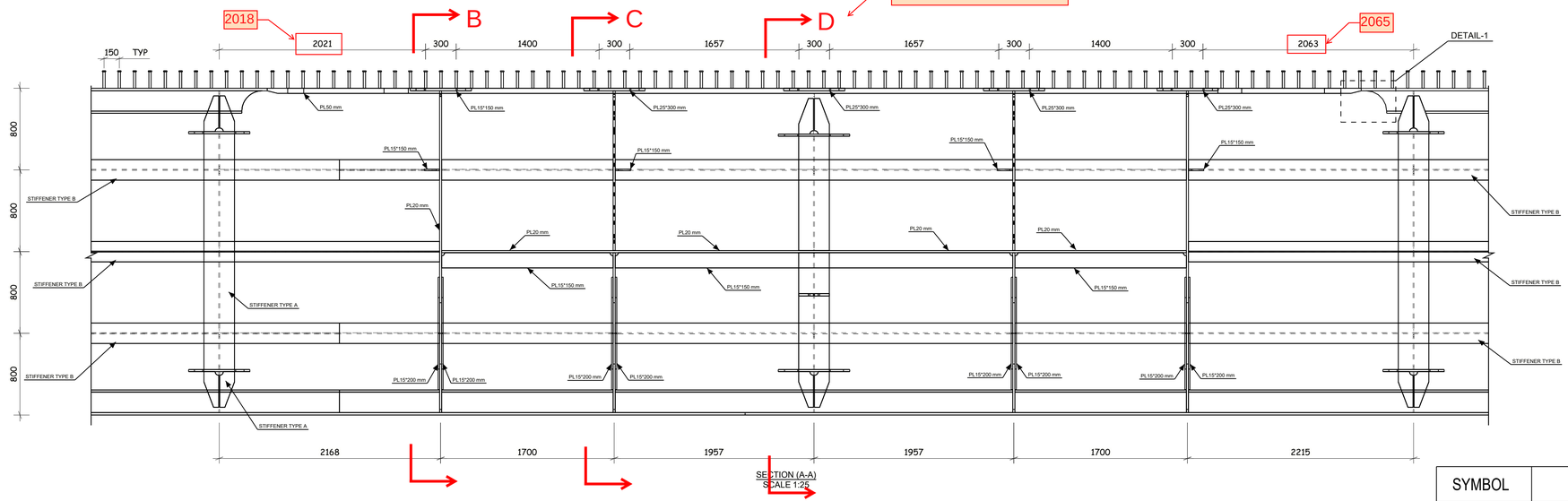


SECTION (A-A)
SCALE 1:25

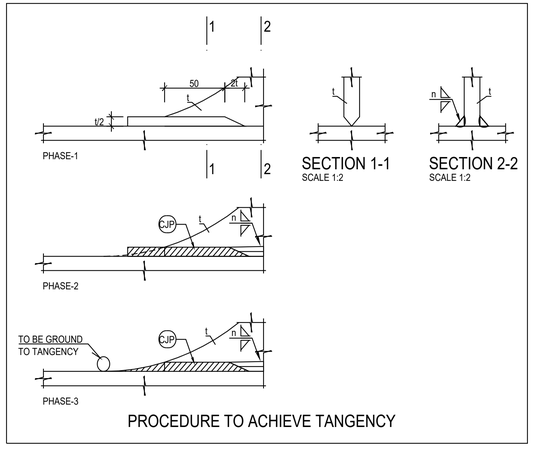


PROCEDURE TO ACHIEVE TANGENCY

| CONCRETE ELEMENT | f'c (MPa) CYLINDER / CUBIC | CONCRETE COVER (mm) |
|---|---|---|
| PILES | 35/45 | 75 |
| PIERS | 35/45 | 50 |
| STRADDLE BENT HEADSTOCK CAST IN SITU ZONE | 40/50 | 50 |

| STEEL | STEEL GRADE |
|---|---|
| REINFORCING STEEL | B500DWR |
| STRUCTURAL STEEL (t≤40mm) | S355J2N [EN 10025 : 2018] |
| STRUCTURAL STEEL (t>40mm) | S355K2N [EN 10025 : 2018] |
| SHAPES (UPN 200) | S355J0N [EN 10025 : 2018] |
| SHEAR CONNECTOR - STUD Ø22 h=175mm S235J2G3+C450 ST37-3K DIN17100 | |

## FILLET WELDS

- UNLESS NOTED OTHERWISE, ALL FILLET WELDS SHALL BE CONTINUOUS.
- FILLET WELDS SHALL BE MADE FROM BOTH SIDES (SYMMETRICAL BEADS).
- EFFECTIVE THROAT THICKNESSES ARE DEFINED (THEY SHOULD BE MULTIPLIED BY 1.41 TO GET THE LEG LENGTHS).

## GROOVE WELDS

- ALL GROOVE WELDS SHALL BE MADE COMPLETE JOINT PENETRATION (CJP). BUTT JOINTS SHALL BE MADE WITH RUN-OFF PLATES. RUN-OFF PLATES SHALL BE REMOVED AFTER WELDING, GROUNDING THE EDGE IN THE DIRECTION OF STRESSES.
- STEEL TO BE PAINTED IN ACCORDANCE WITH PROJECT SPECIFICATIONS. (CORROSIVITY CATEGORY C4 DURABILITY VERY HIGH)
- QUALITY CONTROL IN ACCORDANCE WITH PROJECT SPECIFICATIONS. (EXECUTION LEVEL EXC3 ACCORDING TO EN1090-2:2019)

| SYMBOL | DESCRIPTION |
|---|---|
| e | FILLET WELD OF EFFECTIVE THROAT THICKNESS (e)mm. |
| e | FILLET WELD OF EFFECTIVE THROAT THICKNESS (e)mm, BOTH SIDES. |
| PP | PARTIAL PENETRATION WELD. |
| CJP | COMPLETE JOINT PENETRATION |
| | ALL AROUND WELD. |
| | FIELD WELD. |
| UT x% | ULTRASONIC TEST (x %). |

e=EFFECTIVE THROAT THICKNESS
l=LEG

REVIEWED WITH COMMENT
MONORAILS PROJECT

-Approval is subject to approval of coordination package between multi-disciplines.

6 October Monorail
Engineering Unit
Valid For Construction

## GENERAL NOTES:

1. ALL DIMENSIONS ARE IN MILLIMETERS UNLESS OTHERWISE SPECIFIED.
2. LEVELS ARE IN METERS
3. DESIGN SERVICE LIFE OF 100 YEARS.
4. FLANGES OF TOP AND BOTTOM CHORDS TO BE SUPPLIED WITH IMPROVED THROUGH THICKNESS PROPERTIES Z25 ACCORDING TO EN10164.

REFERENCE DRAWINGS

| | |
|---|---|
| 1 | 93M-BOA-NAT-LOT-26612 |
| 2 | |
| 3 | |
| 4 | |
| 5 | |
| 6 | |
| 7 | |
| 8 | |
| 9 | |
| 10 | |
| 11 | |

6TH OF OCTOBER CITY RAIL TRANSIT MONORAIL &
NEW CAPITAL CITY RAIL TRANSIT MONORAIL

The Authority
Hill International
Authority Consultant

Main Contractor

Designer

CONTRACTOR
CONSULTANT :

ENGINEERING HOUSE FOR CONSULTANCY

| REV | DATE | BY | DESCRIPTION | CHK | APD |
|---|---|---|---|---|---|
| A | 20-11-24 | E.SH | ISSUE FOR APPROVAL | A.SH | M.M |

SCALE: AS SHOWN
SHOP DRAWING
DATE: 10-11-2024

DRAWING TITLE:
6TH OF OCTOBER MONORAIL
SHOP DRAWING FOR STRADDLE BENT 6OL11-22C2
STEEL RAFTER.
SECTIONS DETAILS.03

| Project Code | Rubric | Initiator | Lot | Ref | Number | Revision |
|---|---|---|---|---|---|---|
| 9 3 M | 0 4 0 7 | A C C | 6 0 L 1 1 | D W G | 90449 | A |

Tata Structures

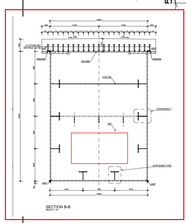

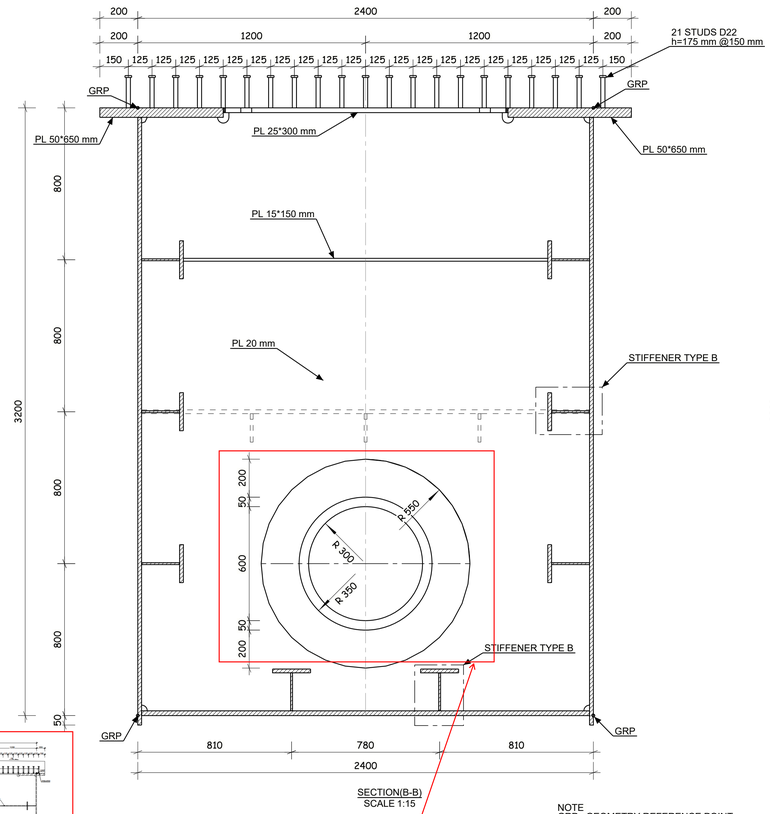


SECTION(B-B)
SCALE 1:15

NOTE
GRP : GEOMETRY REFERENCE POINT

Mismatched opening location please check.

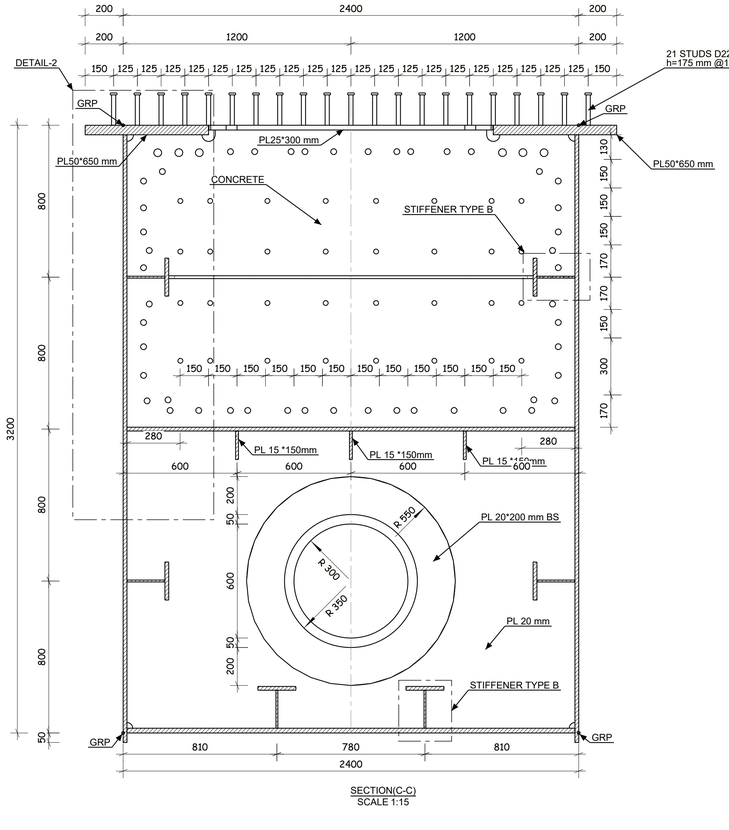


SECTION(C-C)
SCALE 1:15

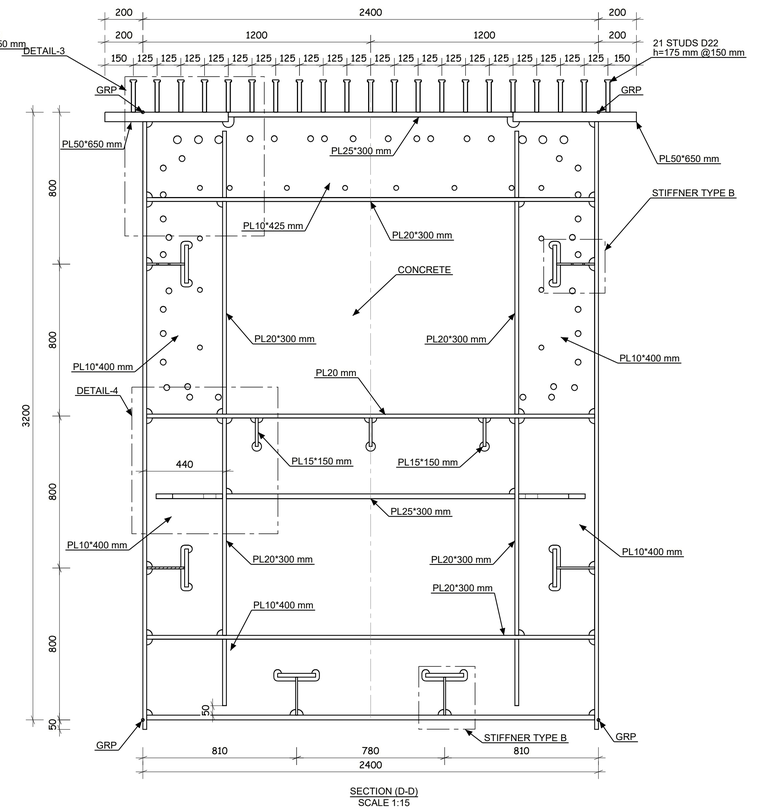


SECTION (D-D)
SCALE 1:15

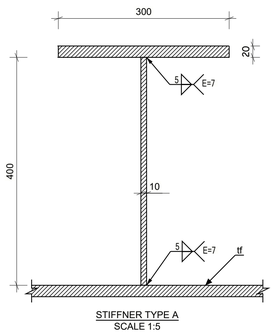


STIFFNER TYPE A
SCALE 1:5

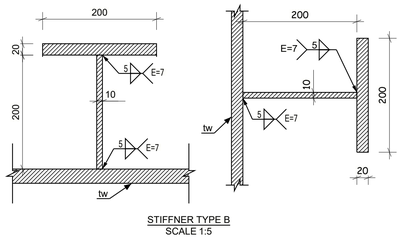


STIFFNER TYPE B
SCALE 1:5

REVIEWED WITH COMMENT
MONORAILS PROJECT

-Approval is subject to approval of coordination package between multi-disciplines.

| CONCRETE ELEMENT | f'c (MPa) CYLINDER / CUBIC | CONCRETE COVER (mm) |
|---|---|---|
| PILES | 35/45 | 75 |
| PIERS | 35/45 | 50 |
| STRADDLE BENT HEADSTOCK CAST IN SITU ZONE | 40/50 | 50 |

| STEEL | STEEL GRADE |
|---|---|
| REINFORCING STEEL | B500DWR |
| STRUCTURAL STEEL (t≤40mm) | S355J2N [EN 10025 : 2018] |
| STRUCTURAL STEEL (t>40mm) | S355K2N [EN 10025 : 2018] |
| SHAPES (UPN 200) | S355J0N [EN 10025 : 2018] |
| SHEAR CONNECTOR - STUD Ø22 h=175mm S235J2G3+C450 ST37-3K DIN17100 | |

NOTE:

CONCRETE TO BE POURED IN STAGES.
MAXIMUM STAGE HEIGHT OF 0.8 m.

| CONCRETE ELEMENT | f'c (MPa) CYLINDER / CUBIC | CONCRETE COVER (mm) |
|---|---|---|
| PILES | 35/45 | 75 |
| PIERS | 35/45 | 50 |
| STRADDLE BENT HEADSTOCK CAST IN SITU ZONE | 40/50 | 50 |

| STEEL | STEEL GRADE |
|---|---|
| REINFORCING STEEL | B500DWR |
| STRUCTURAL STEEL (t≤40mm) | S355J2N [EN 10025 : 2018] |
| STRUCTURAL STEEL (t>40mm) | S355K2N [EN 10025 : 2018] |
| SHAPES (UPN 200) | S355J0N [EN 10025 : 2018] |
| SHEAR CONNECTOR - STUD Ø22 h=175mm S235J2G3+C450 ST37-3K DIN17100 | |

### FILLET WELDS

- UNLESS NOTED OTHERWISE, ALL FILLET WELDS SHALL BE CONTINUOUS.
- FILLET WELDS SHALL BE MADE FROM BOTH SIDES (SYMMETRICAL BEADS).
- EFFECTIVE THROAT THICKNESSES ARE DEFINED (THEY SHOULD BE MULTIPLIED BY 1.41 TO GET THE LEG LENGTHS).

### GROOVE WELDS

- ALL GROOVE WELDS SHALL BE MADE COMPLETE JOINT PENETRATION (CJP). BUTT JOINTS SHALL BE MADE WITH RUN-OFF PLATES. RUN-OFF PLATES SHALL BE REMOVED AFTER WELDING AND GRINDING THE ENDS IN THE DIRECTION OF STRESSES.
- ALL TO BE PAINTED IN ACCORDANCE WITH PROJECT SPECIFICATIONS.
- CORROSIVITY CATEGORY C4 (URBAN) VERY HIGH (INDUSTRIAL).
- DURABILITY CONSIDERATION ACCORDANCE WITH PROJECT SPECIFICATIONS.
- (EXECUTION LEVEL EXC3 ACCORDING TO EN1090-2:2019)

| SYMBOL | DESCRIPTION |
|---|---|
| e | FILLET WELD OF EFFECTIVE THROAT THICKNESS (e)mm. |
| e | FILLET WELD OF EFFECTIVE THROAT THICKNESS (e)mm, BOTH SIDES. |
| PP | PARTIAL PENETRATION WELD. |
| CJP | COMPLETE JOINT PENETRATION. |
| | FILLET WELD. |
| UT x% | ULTRASONIC TEST AT x%. |

e=EFFECTIVE THROAT THICKNESS
hLEG

6 October Monorail
Engineering Unit
Valid For Construction

## GENERAL NOTES:

1. ALL DIMENSIONS ARE IN MILLIMETERS UNLESS OTHERWISE SPECIFIED.
2. LEVELS ARE IN METERS
3. DESIGN SERVICE LIFE OF 100 YEARS.
4. FLANGES OF TOP AND BOTTOM CHORDS TO BE SUPPLIED WITH IMPROVED THROUGH THICKNESS PROPERTIES Z25 ACCORDING TO EN10164.

REFERENCE DRAWINGS

| | |
|---|---|
| 1 | 93M-BOA-NAT-LOT-26612 |
| 2 | |
| 3 | |
| 4 | |
| 5 | |
| 6 | |
| 7 | |
| 8 | |
| 9 | |
| 10 | |
| 11 | |

6TH OF OCTOBER CITY RAIL TRANSIT MONORAIL &
NEW CAPITAL CITY RAIL TRANSIT MONORAIL

The Authority
Hill International
Authority Consultant

Main Contractor

Designer

CONTRACTOR
CONSULTANT :

ENGINEERING HOUSE FOR CONSULTANCY

SCALE
AS SHOWN

SHOPDRAWING

DATE
20-11-2024

| REV | DATE | BY | DESCRIPTION | CHK | APD |
|---|---|---|---|---|---|
| A | 20-11-24 | E.SH | ISSUE FOR APPROVAL | A.SH | M.M |

DRAWING TITLE:
6TH OF OCTOBER MONORAIL
**SHOP DRAWING FOR STRADDLE BENT 6OL11-22C2**
**STEEL RAFTER.**
SECTIONS DETAILS.04

| Project Code | Rubric | Initiator | Lot | Ref | Number | Revision |
|---|---|---|---|---|---|---|
| 9 3 | M 0 4 0 7 | A C C | 6 0 L 1 1 | D W G | 90450 | A |

Tekla Structures

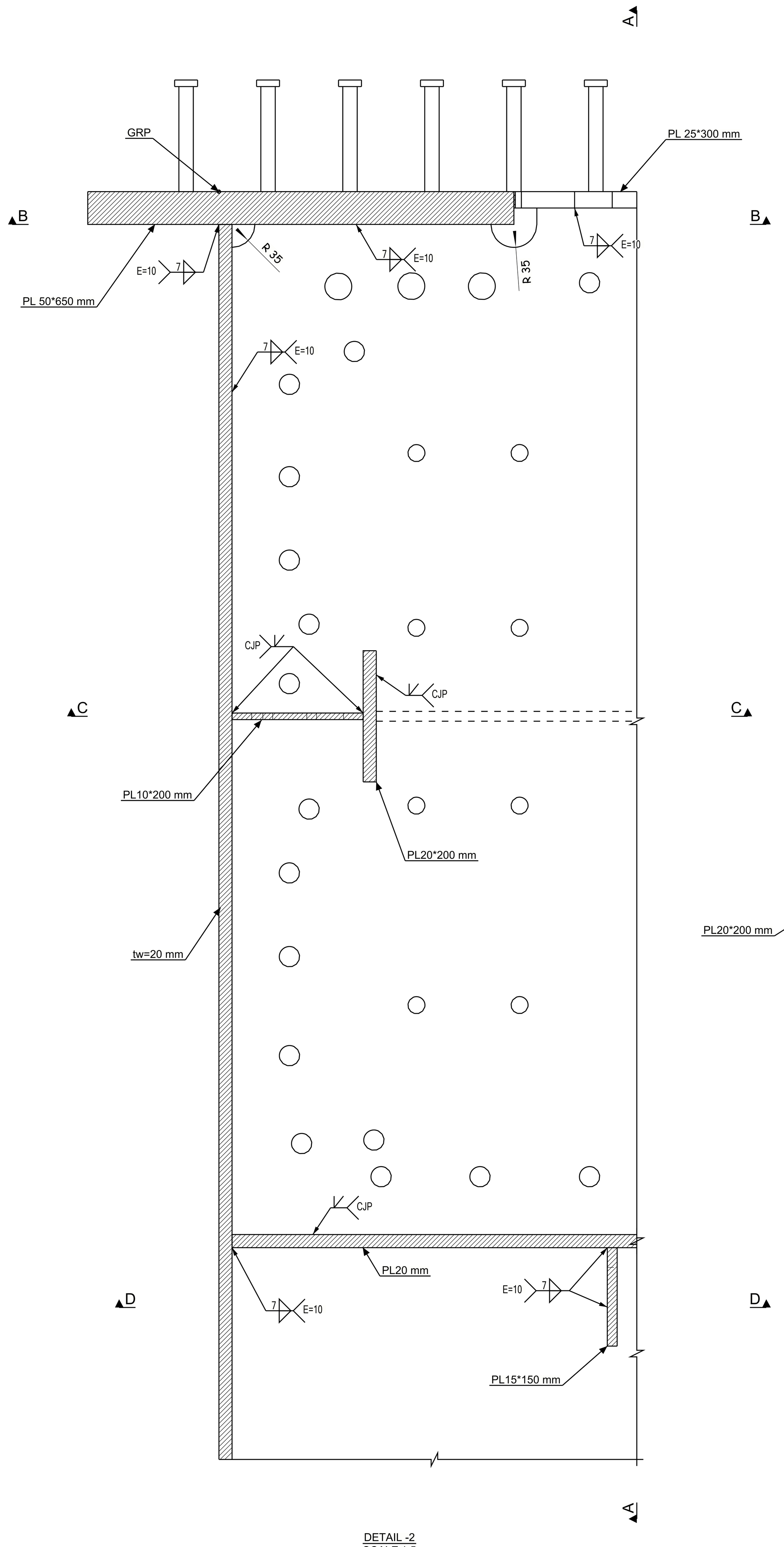


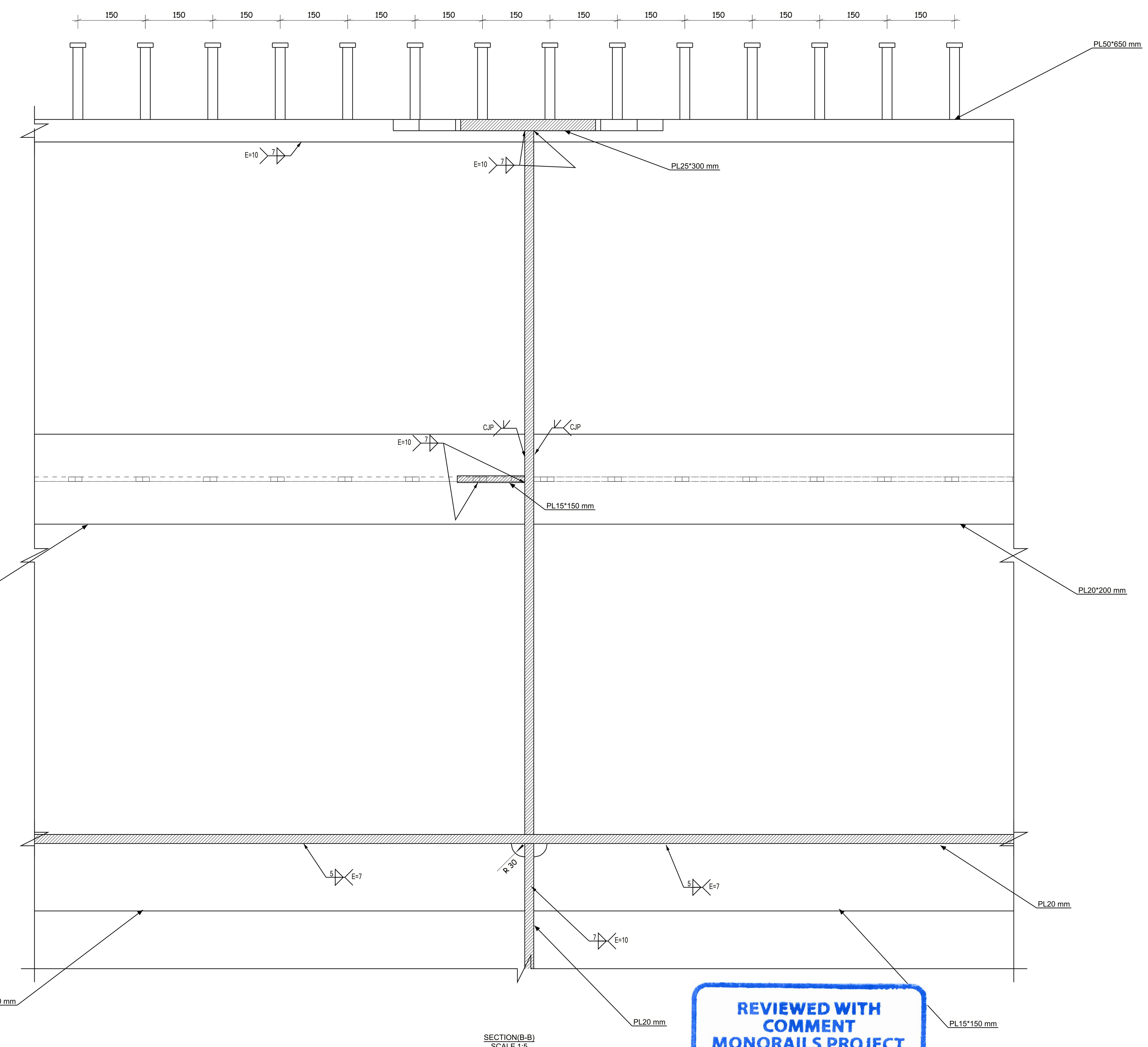


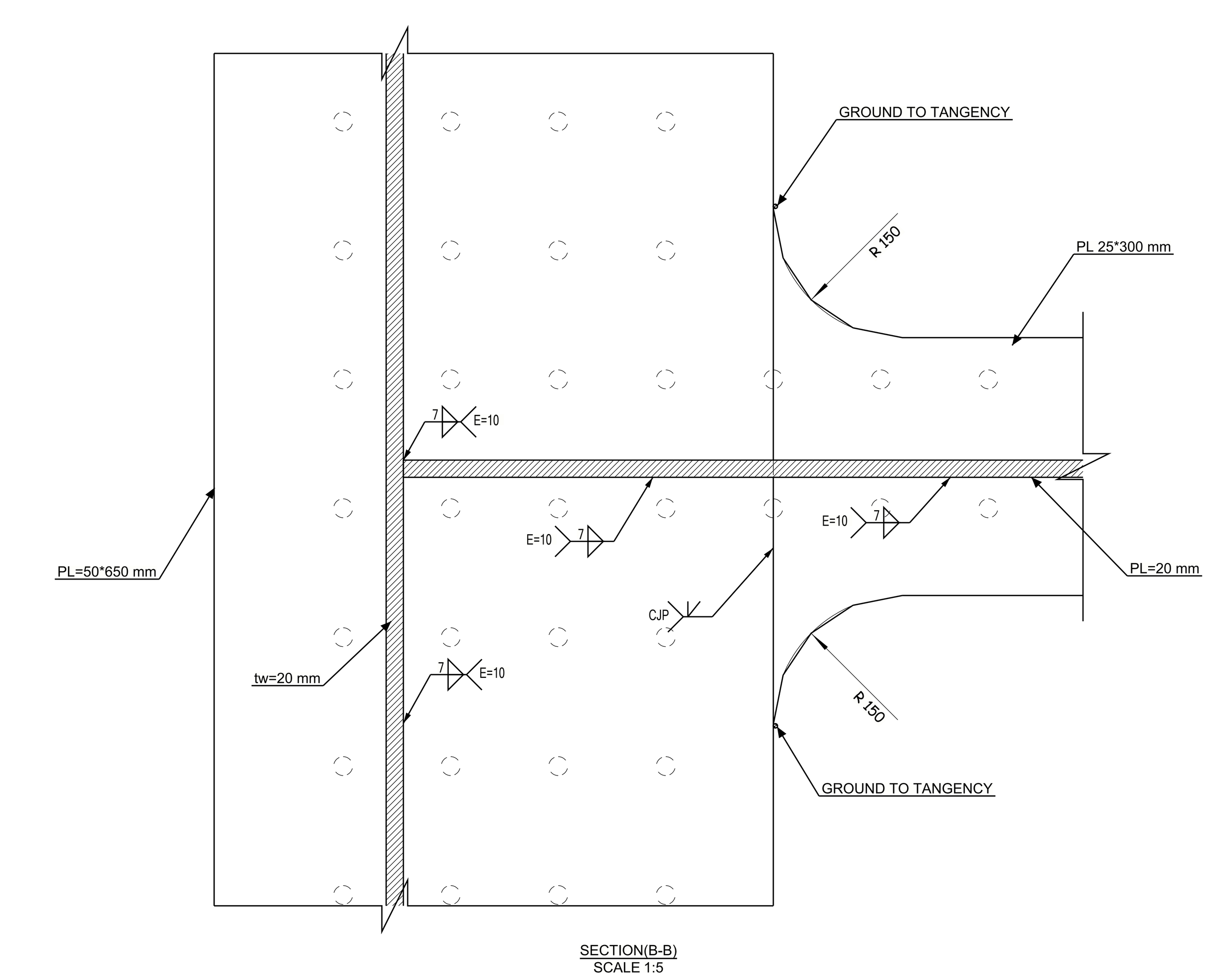


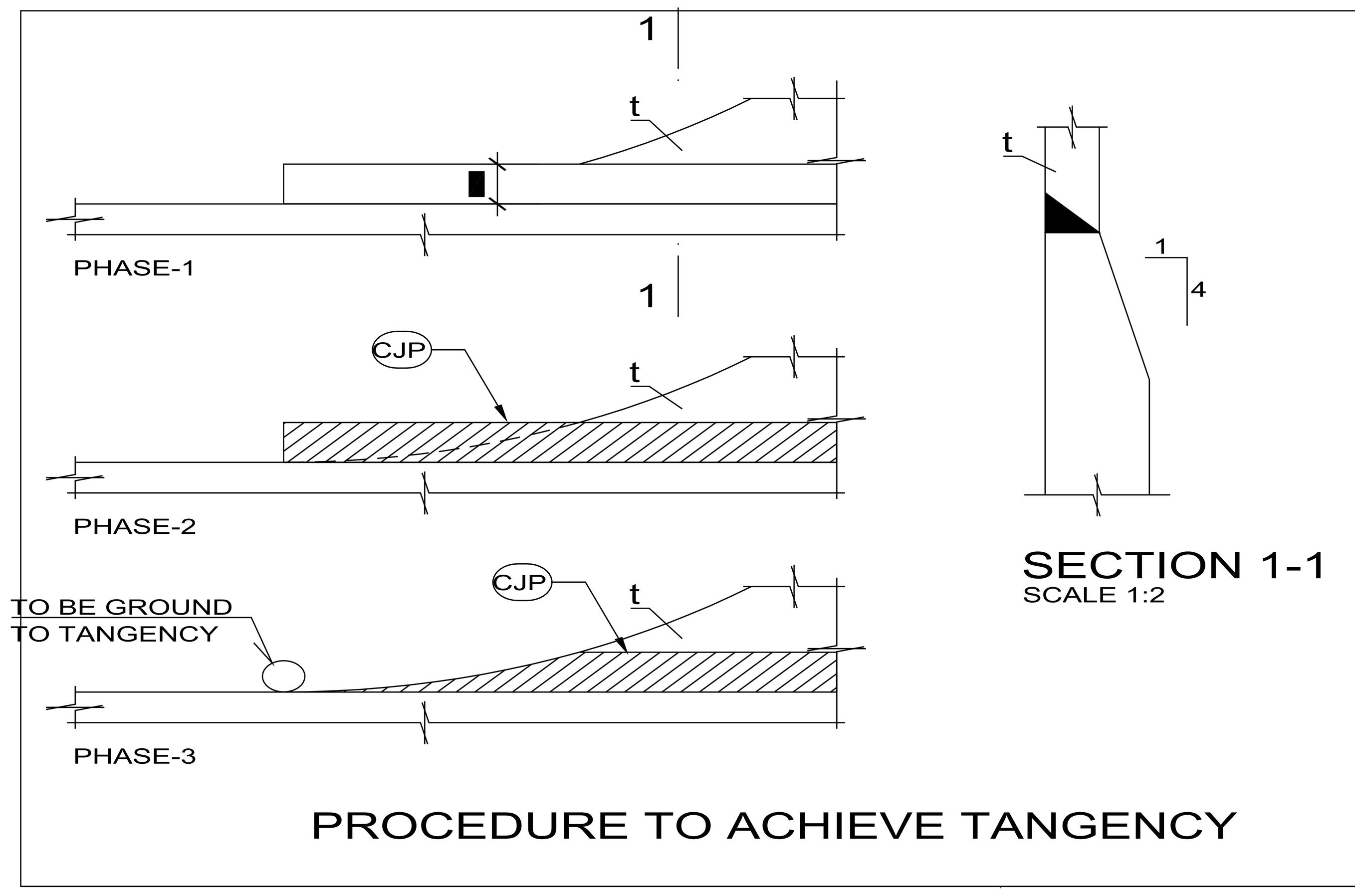


REVIEWED WITH COMMENT MONORAILS PROJECT

-Approval is subject to approval of coordination package between multi-disciplines.

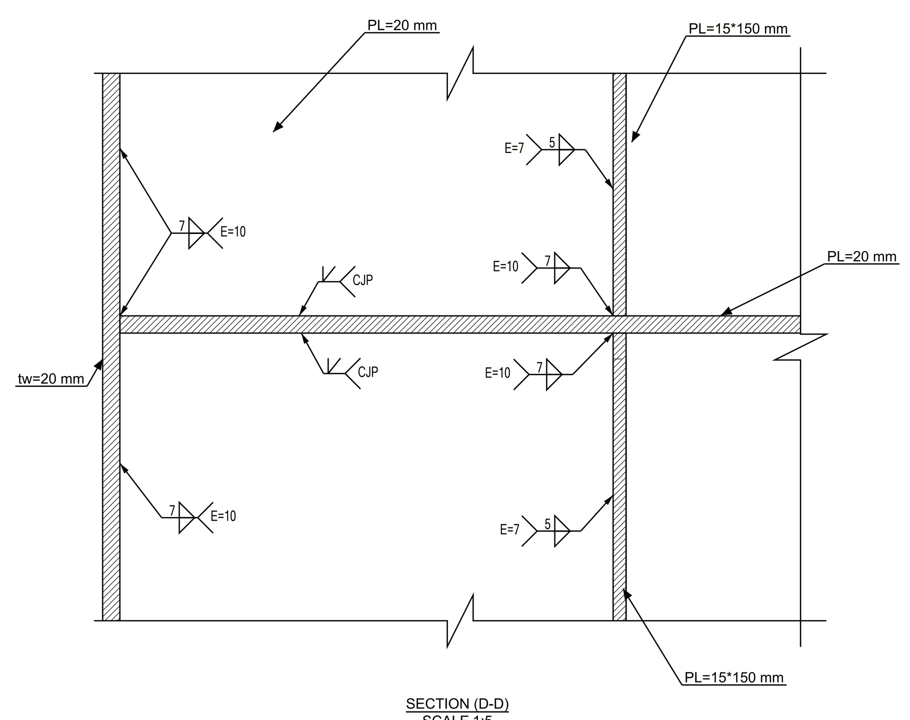


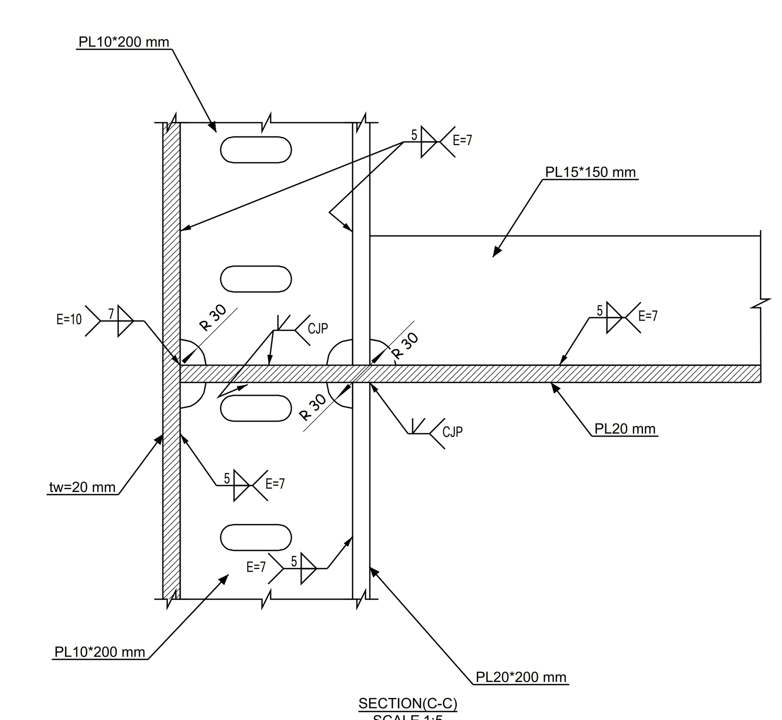


## FILLET WELDS

- UNLESS NOTED OTHERWISE, ALL FILLET WELDS SHALL BE CONTINUOUS.
- FILLET WELDS SHALL BE MADE FROM BOTH SIDES (SYMMETRICAL BEADS).
- EFFECTIVE THROAT THICKNESSES ARE DEFINED (THEY SHOULD BE MULTIPLIED BY 1.41 TO GET THE LEG LENGTHS).

## GROOVE WELDS

- ALL GROOVE WELDS SHALL BE MADE COMPLETE JOINT PENETRATION (CJP). BUTT JOINTS SHALL BE MADE WITH RUN-OFF PLATES. RUN-OFF PLATES SHALL BE REMOVED AFTER WELDING, GROUNDING THE EDGE IN THE DIRECTION OF STRESSES.

- STEEL TO BE PAINTED IN ACCORDANCE WITH PROJECT SPECIFICATIONS. (CORROSIVITY CATEGORY C4 DURABILITY VERY HIGH)
- QUALITY CONTROL IN ACCORDANCE WITH PROJECT SPECIFICATIONS. (EXECUTION LEVEL EXC3 ACCORDING TO EN1090-2:2019)

| SYMBOL | DESCRIPTION | |
|---|---|---|
| e | FILLET WELD OF EFFECTIVE THROAT THICKNESS (e)mm. | e=EFFECTIVE THROAT THICKNESS<br>l=LEG |
| e | FILLET WELD OF EFFECTIVE THROAT THICKNESS (e)mm, BOTH SIDES. | |
| PP | PARTIAL PENETRATION WELD. | |
| CJP | COMPLETE JOINT PENETRATION. | |
| | ALL AROUND WELD. | |
| | FIELD WELD. | |
| UT x% | ULTRASONIC TEST AT x%. | |

6 October Monorail Engineering Unit Valid For Construction

## GENERAL NOTES:

1. ALL DIMENSIONS ARE IN MILLIMETERS UNLESS OTHERWISE SPECIFIED.
2. LEVELS ARE IN METERS
3. DESIGN SERVICE LIFE OF 100 YEARS.
4. FLANGES OF TOP AND BOTTOM CHORDS TO BE SUPPLIED WITH IMPROVED THROUGH THICKNESS PROPERTIES Z25 ACCORDING TO EN10164.

REFERENCE DRAWINGS

| | |
|---|---|
| 1 | 93M-BOA-NAT-LOT-26612 |
| 2 | |
| 3 | |
| 4 | |
| 5 | |
| 6 | |
| 7 | |
| 8 | |
| 9 | |
| 10 | |
| 11 | |

6TH OF OCTOBER CITY RAIL TRANSIT MONORAIL & NEW CAPITAL CITY RAIL TRANSIT MONORAIL

وزارة النقل
MINISTRY OF TRANSPORT
The Authority
Hill International
Authority Consultant
ORASCOM CONSTRUCTION
BOMBARDIER
Main Contractor
SENER
SHAKER CONSULTANCY GROUP
Designer

CONTRACTOR CONSULTANT:
EHC
ENGINEERING HOUSE FOR CONSULTANCY

| SCALE | SHOP DRAWING | DATE |
|---|---|---|
| AS SHOWN | | 20.11.2024 |

| REV | DATE | BY | DESCRIPTION | CHK | APD |
|---|---|---|---|---|---|
| A | 20-11-24 | E.SH | ISSUE FOR APPROVAL | A.SH | M.M |

DRAWING TITLE:
6TH OF OCTOBER MONORAIL
**SHOP DRAWING FOR STRADDLE BENT 6OL11-22C2**
**STEEL RAFTER.**
SECTIONS DETAILS.05

| Project Code | Rubric | Initiator | Lot | Ref | Number | Revision |
|---|---|---|---|---|---|---|
| 9 3 | M 0 4 0 7 | A C C | 6 0 L 1 1 | D W G | 90451 | A |

REVIEWED WITH COMMENT
MONORAILS PROJECT

-Approval is subject to approval of coordination package between multi-disciplines.

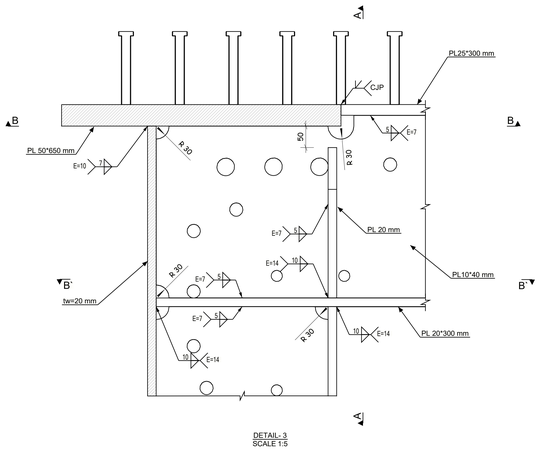


DETAIL- 3
SCALE 1:5

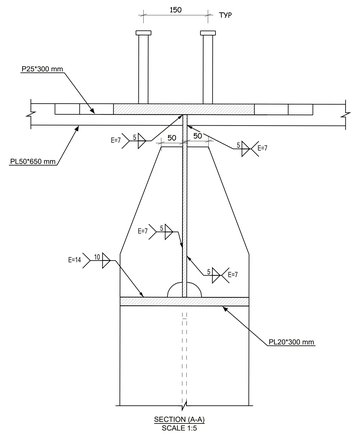


SECTION (A-A)
SCALE 1:5

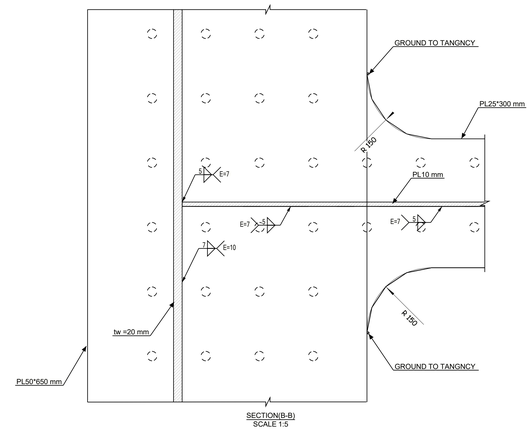


SECTION(B-B)
SCALE 1:5

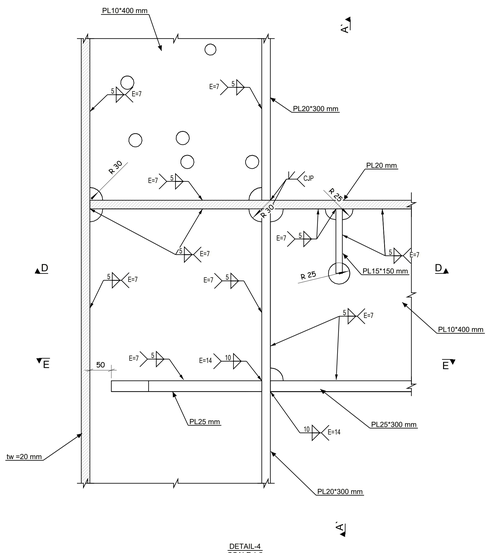


DETAIL-4
SCALE 1:5

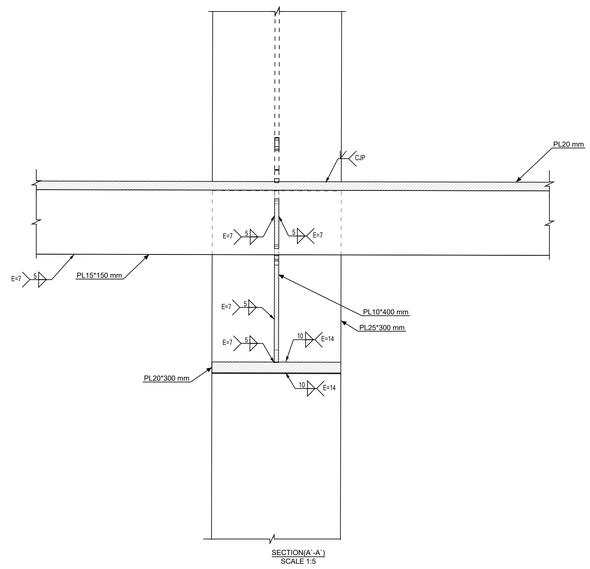


SECTION(A'-A')
SCALE 1:5

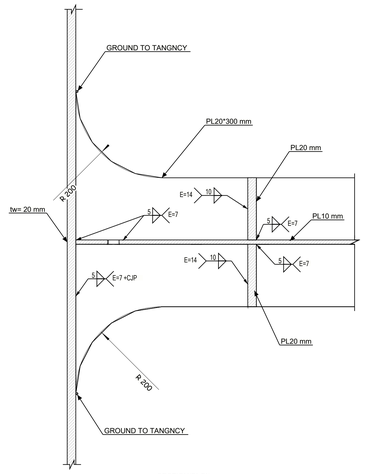


SECTION(B'-B')
SCALE 1:5

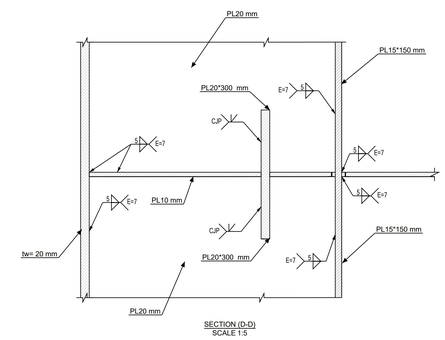


SECTION (D-D)
SCALE 1:5

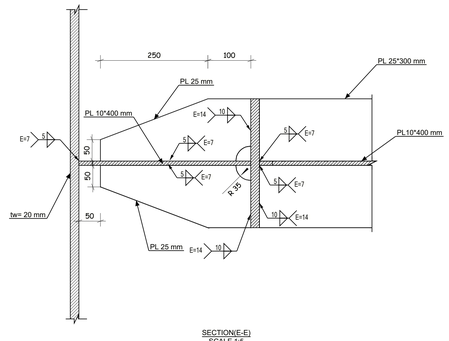


SECTION(E-E)
SCALE 1:5

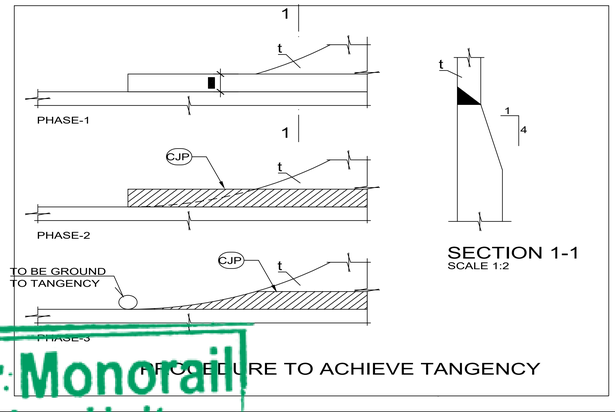


SECTION 1-1
SCALE 1:2

PROCEDURE TO ACHIEVE TANGENCY

## FILLET WELDS

- UNLESS NOTED OTHERWISE, ALL FILLET WELDS SHALL BE CONTINUOUS.
- FILLET WELDS SHALL BE MADE FROM BOTH SIDES (SYMMETRICAL BEADS).
- EFFECTIVE THROAT THICKNESSES ARE DEFINED (THEY SHOULD BE MULTIPLIED BY 1.41 TO GET THE LEG LENGTHS).

## GROOVE WELDS

- ALL GROOVE WELDS SHALL BE MADE COMPLETE JOINT PENETRATION (CJP). BUTT JOINTS SHALL BE MADE WITH RUN-OFF PLATES. RUN-OFF PLATES SHALL BE REMOVED AFTER WELDING, GROUNDING THE EDGE IN THE DIRECTION OF STRESSES.
- STEEL TO BE PAINTED IN ACCORDANCE WITH PROJECT SPECIFICATIONS. (CORROSIVITY CATEGORY C4 DURABILITY VERY HIGH)
- QUALITY CONTROL IN ACCORDANCE WITH PROJECT SPECIFICATIONS. (EXECUTION LEVEL EXC3 ACCORDING TO EN1090-2:2019)

| SYMBOL | DESCRIPTION |
|---|---|
| e | FILLET WELD OF EFFECTIVE THROAT THICKNESS (e)mm. |
| e | FILLET WELD OF EFFECTIVE THROAT THICKNESS (e)mm, BOTH SIDES. |
| PP | PARTIAL PENETRATION WELD. |
| CJP | COMPLETE JOINT PENETRATION. |
| | ALL AROUND WELD. |
| | FIELD WELD. |
| UT x% | ULTRASONIC TEST AT x%. |

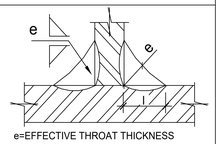


## GENERAL NOTES:

1. ALL DIMENSIONS ARE IN MILLIMETERS UNLESS OTHERWISE SPECIFIED.
2. LEVELS ARE IN METERS
3. DESIGN SERVICE LIFE OF 100 YEARS.
4. FLANGES OF TOP AND BOTTOM CHORDS TO BE SUPPLIED WITH IMPROVED THROUGH THICKNESS PROPERTIES Z25 ACCORDING TO EN10164.

REFERENCE DRAWINGS

| | |
|---|---|
| 1 | 93M-BOA-NAT-LOT-26612 |
| 2 | |
| 3 | |
| 4 | |
| 5 | |
| 6 | |
| 7 | |
| 8 | |
| 9 | |
| 10 | |
| 11 | |

6TH OF OCTOBER CITY RAIL TRANSIT MONORAIL &
NEW CAPITAL CITY RAIL TRANSIT MONORAIL

The Authority
Hill International
Authority Consultant

ORASCOM CONSTRUCTION
BOMBARDIER
Main Contractor

SENER
SHAKER CONSULTANCY GROUP
Designer

6 October Monorail
Engineering Unit
Valid For Construction

CONTRACTOR
CONSULTANT
ENGINEERING HOUSE FOR CONSULTANCY

| SCALE | SHOP DRAWING | DATE |
|---|---|---|
| AS SHOWN | | 20.11.2024 |

| REV | DATE | BY | DESCRIPTION | CHK | APD |
|---|---|---|---|---|---|
| A | 20-11-24 | E.SH | ISSUE FOR APPROVAL | A.SH | M.M |

DRAWING TITLE:
6TH OF OCTOBER MONORAIL
**SHOP DRAWING FOR STRADDLE BENT 6OL11-22C2**
**STEEL RAFTER.**
SECTIONS DETAILS.06

| Project Code | Rubric | Initiator | Lot | Ref | Number | Revision |
|---|---|---|---|---|---|---|
| 93M | 0407 | ACC | 60L11 | DWG | 90452 | A |

REVIEWED WITH COMMENT
MONORAILS PROJECT

-Approval is subject to approval of coordination package between multi-disciplines.

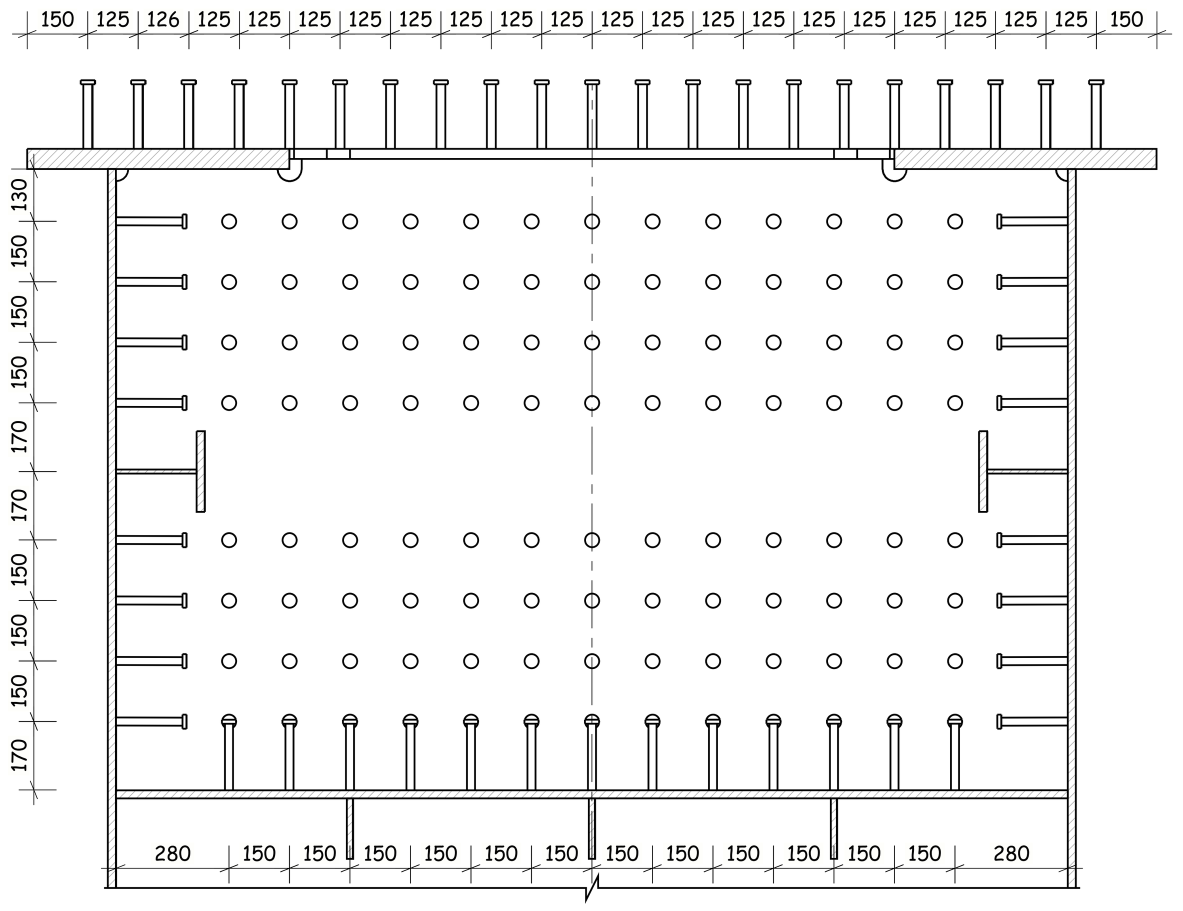

SECTION(A-A)
STUDS D20 h=175 mm LOCATION
SCALE 1:15

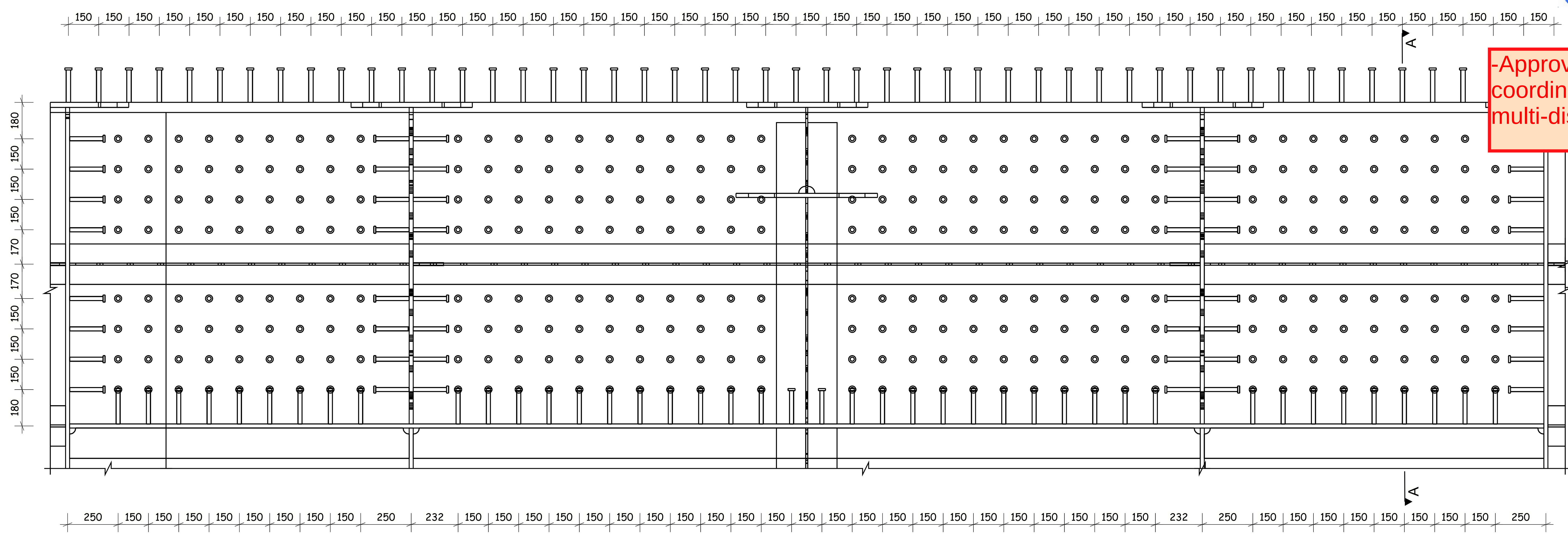

LONGITUDINAL SECTION
SCALE 1:15

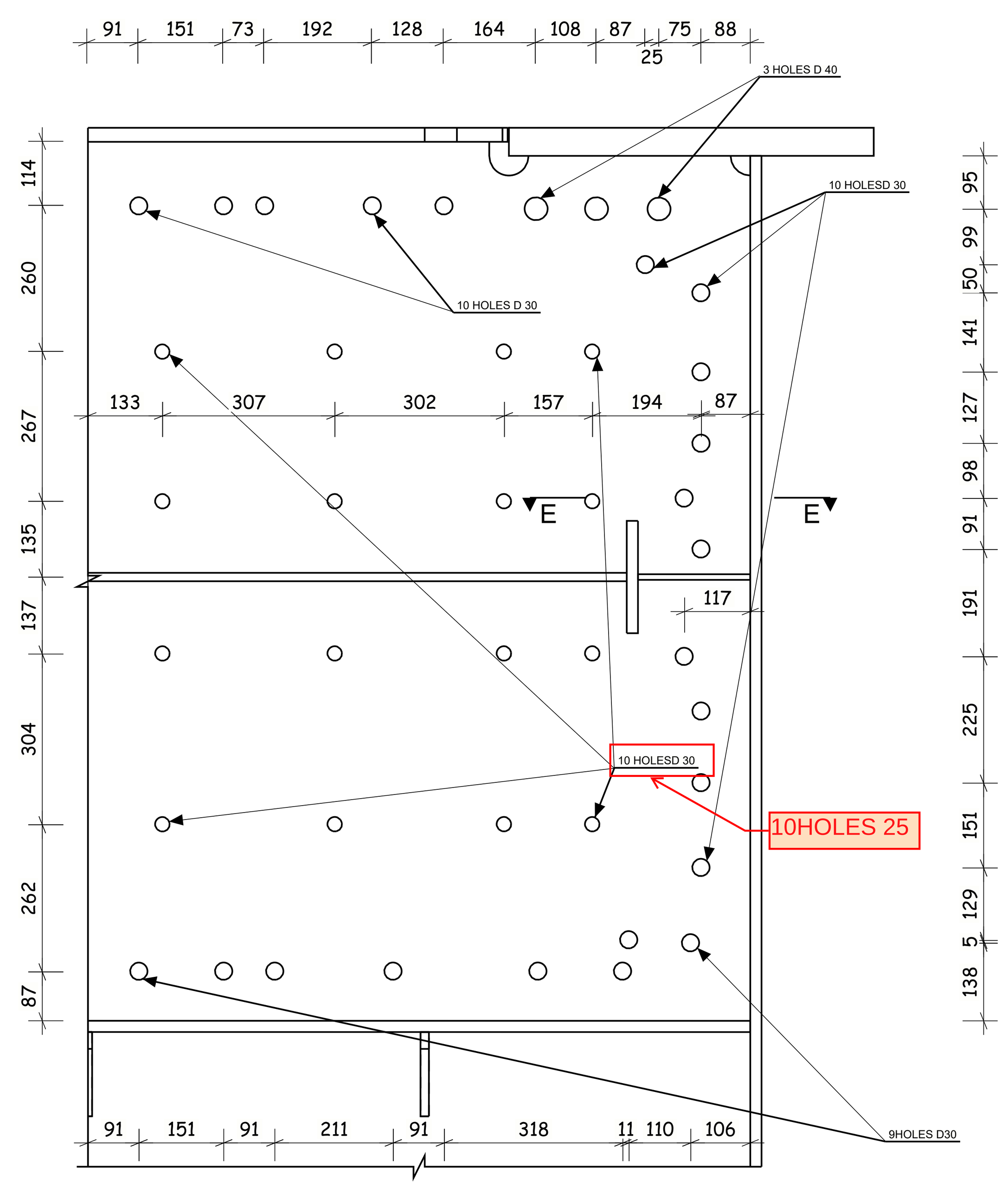


SEMI SECTION (A-A)
HOLE LOCATION
SCALE 1:10

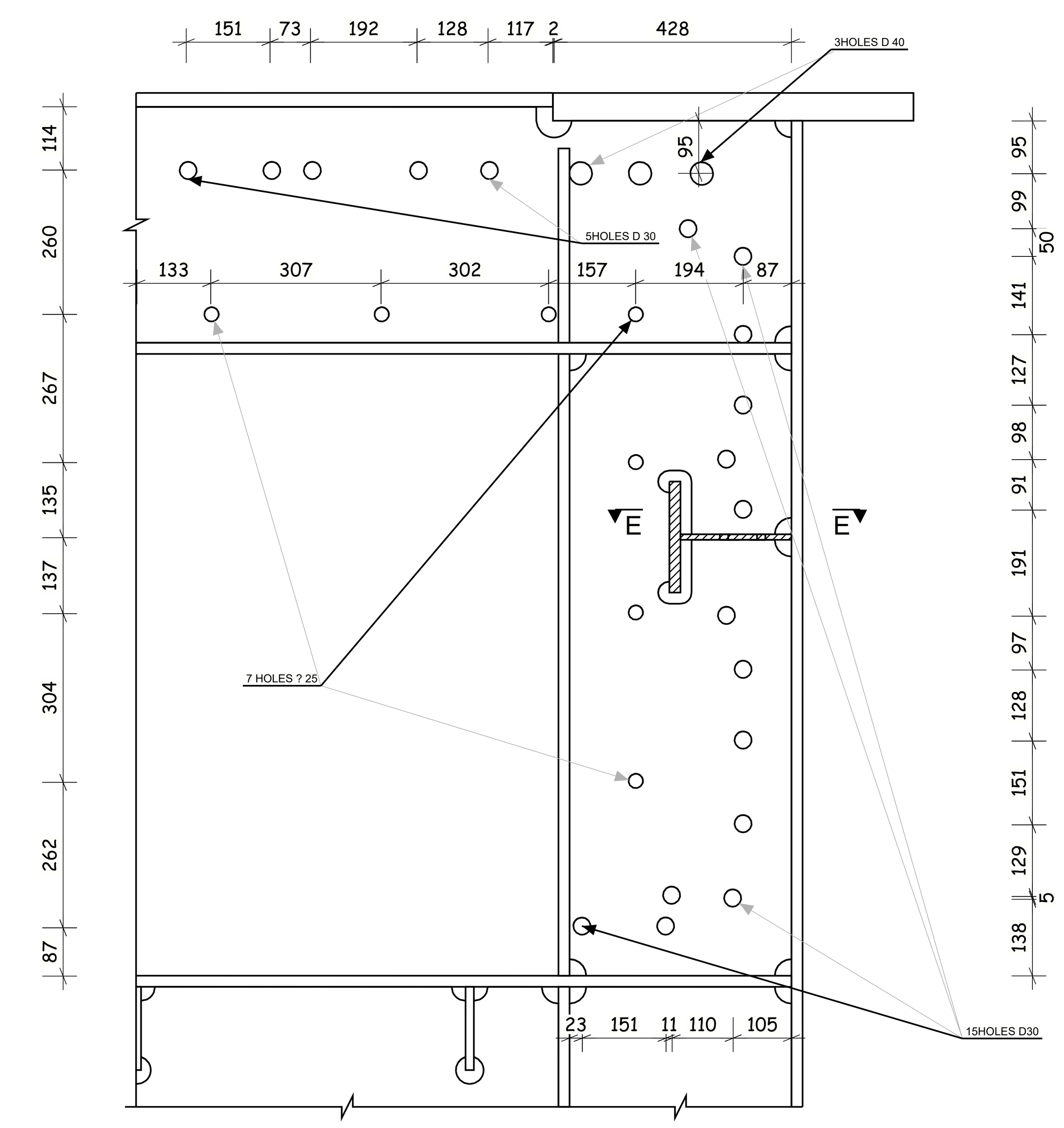


SEMI SECTION (D-D)
HOLE LOCATION
SCALE 1:10

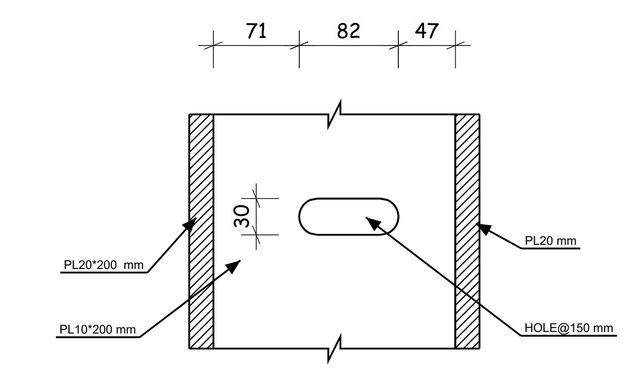

SECTION (E-E)
SCALE 1:5

| CONCRETE ELEMENT | f'c (MPa) CYLINDER / CUBIC | CONCRETE COVER (mm) |
|---|---|---|
| PILES | 35/45 | 75 |
| PIERS | 35/45 | 50 |
| STRADDLE BENT HEADSTOCK CAST IN SITU ZONE | 40/50 | 50 |

| STEEL | STEEL GRADE |
|---|---|
| REINFORCING STEEL | B500DWR |
| STRUCTURAL STEEL (t≤40mm) | S355J2N [EN 10025 : 2018] |
| STRUCTURAL STEEL (t>40mm) | S355K2N [EN 10025 : 2018] |
| SHAPES (UPN 200) | S355J0N [EN 10025 : 2018] |
| SHEAR CONNECTOR - STUD Ø22 h=175mm S235J2G3+C450 ST37-3K DIN17100 | |

### FILLET WELDS

- UNLESS NOTED OTHERWISE, ALL FILLET WELDS SHALL BE CONTINUOUS.
- FILLET WELDS SHALL BE MADE FROM BOTH SIDES (SYMMETRICAL BEADS).
- EFFECTIVE THROAT THICKNESSES ARE DEFINED (THEY SHOULD BE MULTIPLIED BY 1.41 TO GET THE LEG LENGTHS).

### GROOVE WELDS

- ALL GROOVE WELDS SHALL BE MADE COMPLETE JOINT PENETRATION (CJP). BUTT JOINTS SHALL BE MADE WITH RUN-OFF PLATES. RUN-OFF PLATES SHALL BE REMOVED AFTER WELDING, GROUNDING THE EDGE IN THE DIRECTION OF STRESSES.

- STEEL TO BE PAINTED IN ACCORDANCE WITH PROJECT SPECIFICATIONS. (CORROSIVITY CATEGORY C4 DURABILITY VERY HIGH)
- QUALITY CONTROL IN ACCORDANCE WITH PROJECT SPECIFICATIONS (EXECUTION LEVEL EXC3 ACCORDING TO EN1090-2:2019)

| SYMBOL | DESCRIPTION |
|---|---|
| e (fillet symbol) | FILLET WELD OF EFFECTIVE THROAT THICKNESS (e)mm. |
| e (fillet symbol, both sides) | FILLET WELD OF EFFECTIVE THROAT THICKNESS (e)mm, BOTH SIDES. |
| PP | PARTIAL PENETRATION WELD. |
| CJP | COMPLETE JOINT PENETRATION. |
| (circle) | ALL AROUND WELD. |
| (flag) | FIELD WELD. |
| UT x% | ULTRASONIC TEST AT x%. |

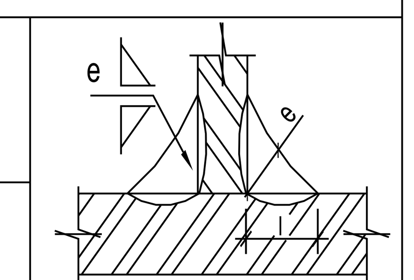


e=EFFECTIVE THROAT THICKNESS
l=LEG

6 October Monorail
Engineering Unit
Valid For Construction

## GENERAL NOTES:

1. ALL DIMENSIONS ARE IN MILLIMETERS UNLESS OTHERWISE SPECIFIED.
2. LEVELS ARE IN METERS
3. DESIGN SERVICE LIFE OF 100 YEARS.
4. FLANGES OF TOP AND BOTTOM CHORDS TO BE SUPPLIED WITH IMPROVED THROUGH THICKNESS PROPERTIES Z25 ACCORDING TO EN10164.

REFERENCE DRAWINGS

| | |
|---|---|
| 1 | 93M-BOA-NAT-LOT-26612 |
| 2 | |
| 3 | |
| 4 | |
| 5 | |
| 6 | |
| 7 | |
| 8 | |
| 9 | |
| 10 | |
| 11 | |

6TH OF OCTOBER CITY RAIL TRANSIT MONORAIL &
NEW CAPITAL CITY RAIL TRANSIT MONORAIL

وزارة النقل
MINISTRY OF TRANSPORT
The Authority
Hill International
Authority Consultant

ORASCOM CONSTRUCTION
BOMBARDIER
Main Contractor

SENER
SHAKER CONSULTANCY GROUP
Designer

CONTRACTOR
CONSULTANT:
EHC
ENGINEERING HOUSE FOR CONSULTANCY

SCALE: AS SHOWN
SHOPDRAWING
DATE: 20-11-2024

| REV | DATE | BY | DESCRIPTION | CHK | APD |
|---|---|---|---|---|---|
| A | 20-11-24 | E.SH | ISSUE FOR APPROVAL | A.SH | M.M |

DRAWING TITLE:
6TH OF OCTOBER MONORAIL
**SHOP DRAWING FOR STRADDLE BENT 6OL11-22C2**
**STEEL RAFTER.**
SECTIONS DETAILS.07

| Project Code | Rubric | Initiator | Lot | Ref | Number | Revision |
|---|---|---|---|---|---|---|
| 9 3 | M 0 4 0 7 | A C C | 6 0 L 1 1 | D W G | 90453 | A |

Tekla Structures

REVIEWED WITH COMMENT
MONORAILS PROJECT

-Approval is subject to approval of coordination package between multi-disciplines.

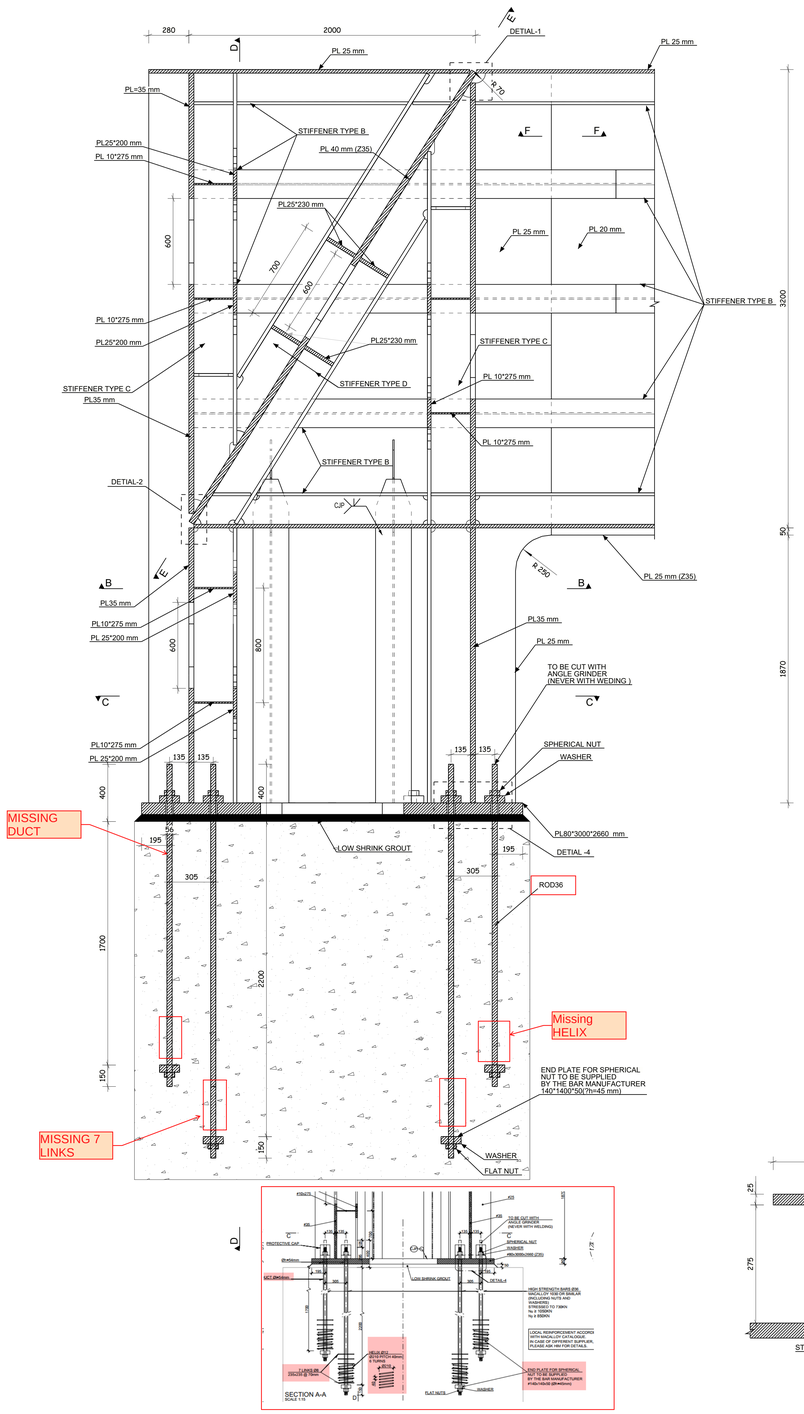


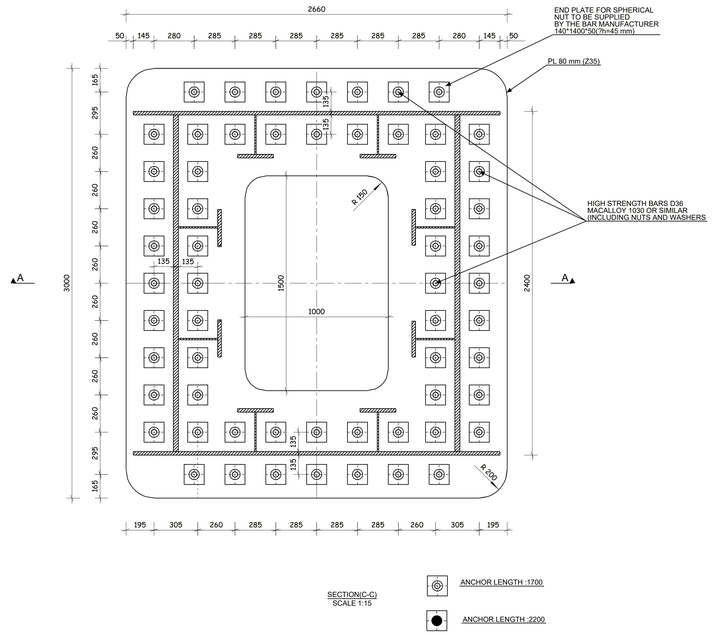


SECTION(C-C)
SCALE 1:15

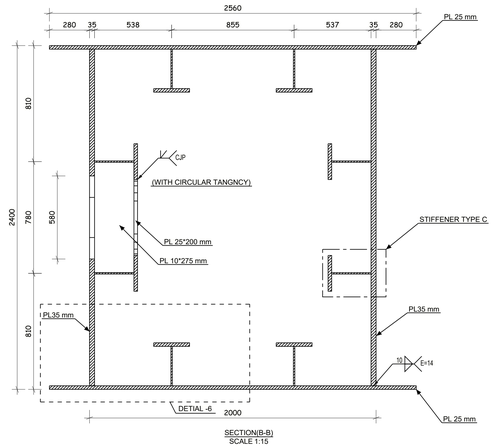


SECTION(B-B)
SCALE 1:15

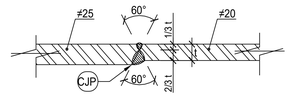


SECTION F-F
SCALE 1:4

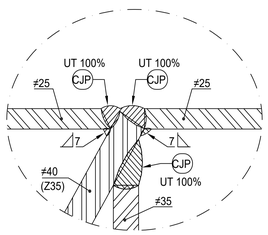


DETAIL-1
SCALE 1:4

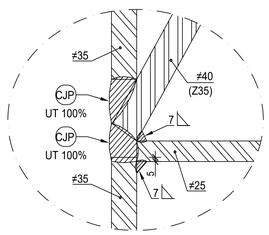


DETAIL-2
SCALE 1:4

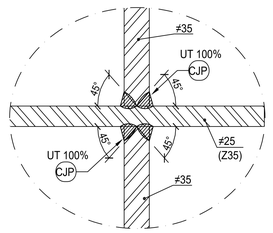


DETAIL-3
SCALE 1:4

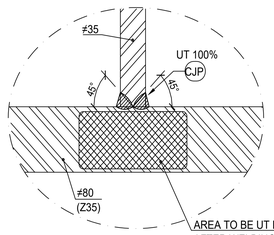


DETAIL-4
SCALE 1:4




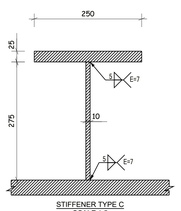


STIFFENER TYPE C
SCALE 1:5

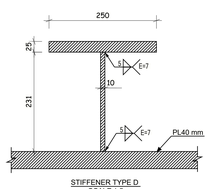


STIFFENER TYPE D
SCALE 1:5

| SYMBOL | DESCRIPTION |
|---|---|
| e | FILLET WELD OF EFFECTIVE THROAT THICKNESS (e)mm. |
| e | FILLET WELD OF EFFECTIVE THROAT THICKNESS (e)mm, BOTH SIDES. |
| PP | PARTIAL PENETRATION WELD. |
| CJP | COMPLETE JOINT PENETRATION. |
| | ALL AROUND WELD. |
| | FIELD WELD. |
| UT x% | ULTRASONIC TESTING x% |

e=EFFECTIVE THROAT THICKNESS
l=LEG

6 October Monorail
Engineering Unit
Valid For Construction

## GENERAL NOTES:

1. ALL DIMENSIONS ARE IN MILLIMETERS UNLESS OTHERWISE SPECIFIED.
2. LEVELS ARE IN METERS
3. DESIGN SERVICE LIFE OF 100 YEARS.
4. FLANGES OF TOP AND BOTTOM CHORDS TO BE SUPPLIED WITH IMPROVED THROUGH THICKNESS PROPERTIES Z25 ACCORDING TO EN10164.

REFERENCE DRAWINGS

| | |
|---|---|
| 1 | 93M-BOA-NAT-LOT-26612 |
| 2 | |
| 3 | |
| 4 | |
| 5 | |
| 6 | |
| 7 | |
| 8 | |
| 9 | |
| 10 | |
| 11 | |

6TH OF OCTOBER CITY RAIL TRANSIT MONORAIL &
NEW CAPITAL CITY RAIL TRANSIT MONORAIL

The Authority
Hill International
Authority Consultant

Main Contractor

Designer

CONTRACTOR
CONSULTANT

ENGINEERING HOUSE FOR CONSULTANCY

SCALE: AS SHOWN | SHOP DRAWING | DATE 20.11.2024

| REV | DATE | BY | DESCRIPTION | CHK | APD |
|---|---|---|---|---|---|
| A | 20-11-24 | E.SH | ISSUE FOR APPROVAL | A.SH | M.M |

DRAWING TITLE:
6TH OF OCTOBER MONORAIL
**SHOP DRAWING FOR STRADDLE BENT 6OL11-22C2**
**STEEL RAFTER.**
SECTIONS DETAILS.08

| Project Code | Rubric | Initiator | Lot | Ref | Number | Revision |
|---|---|---|---|---|---|---|
| 9 3 M | 0 4 0 7 | A C C | 6 0 L 1 1 | D W G | 90454 | A |

Field Structure

REVIEWED WITH COMMENT
MONORAILS PROJECT

-Approval is subject to approval of coordination package between multi-disciplines.

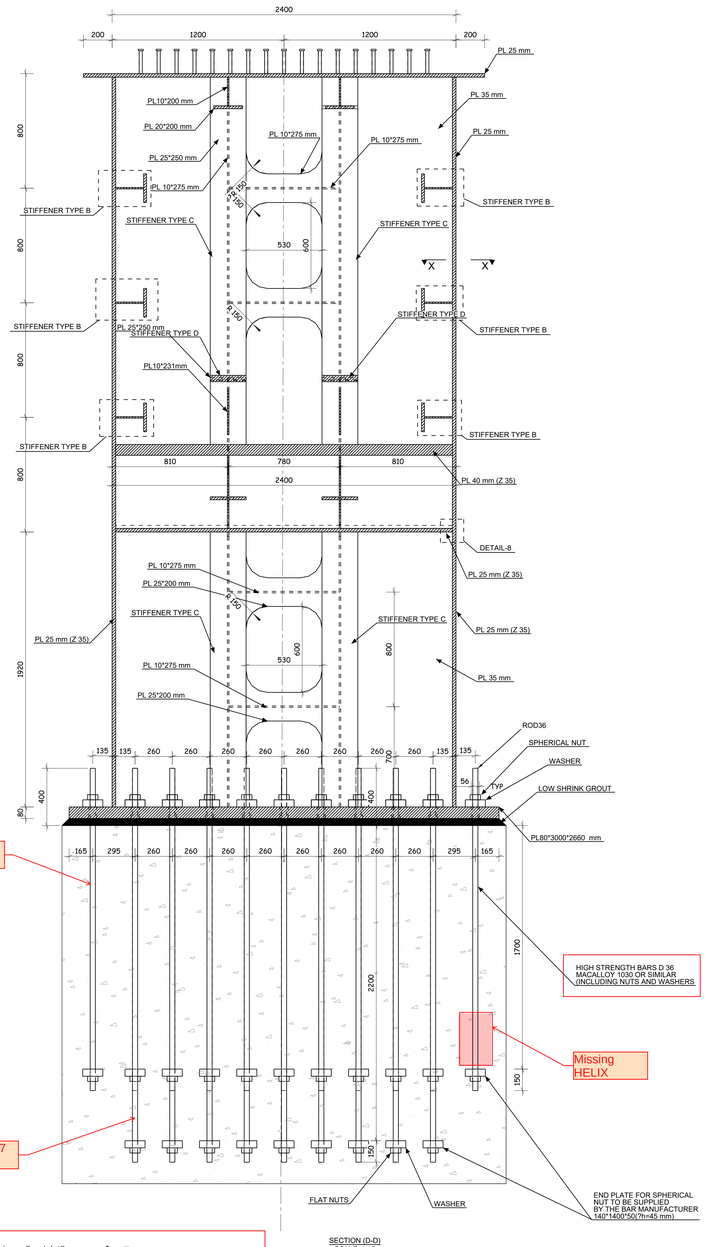


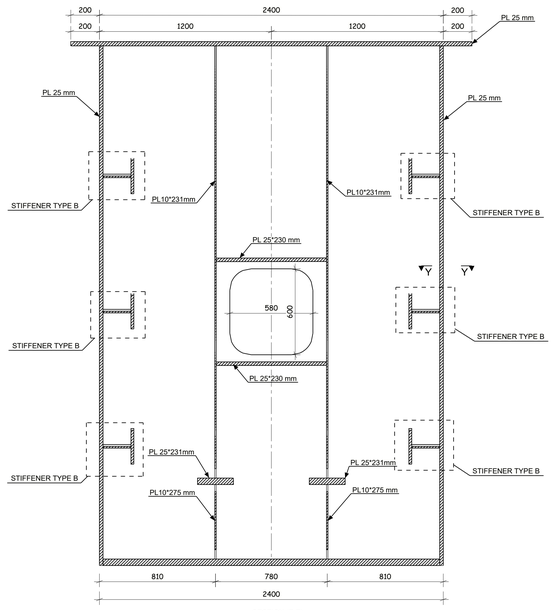


SECTION (E-E)
SCALE 1:15

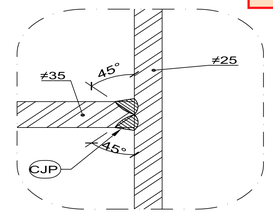


SECTION X-X
SCALE 1:4

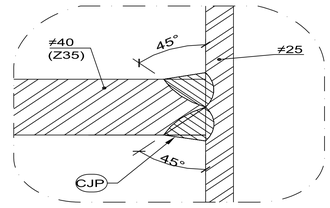


SECTION Y-Y
SCALE 1:4

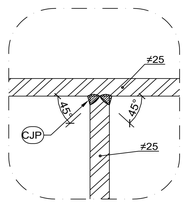


DETAIL-7
SCALE 1:4

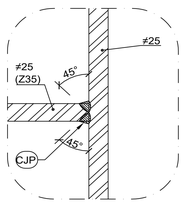


DETAIL-8
SCALE 1:4

| CONCRETE ELEMENT | f'c (MPa) CYLINDER / CUBIC | CONCRETE COVER (mm) |
|---|---|---|
| PILES | 35/45 | 75 |
| PIERS | 35/45 | 50 |
| STRADDLE BENT HEADSTOCK CAST IN SITU ZONE | 40/50 | 50 |

| STEEL | STEEL GRADE |
|---|---|
| REINFORCING STEEL | B500DWR |
| STRUCTURAL STEEL (t≤40mm) | S355J2N [EN 10025 : 2018] |
| STRUCTURAL STEEL (t>40mm) | S355K2N [EN 10025 : 2018] |
| SHAPES (UPN 200) | S355J0N [EN 10025 : 2018] |
| SHEAR CONNECTOR - STUD Ø22 h=175mm S235J2G3+C450 ST37-3K DIN17100 | |

Z35: PLATE TO BE SUPPLIED WITH IMPROVED THROUGH THICKNESS PROPERTIES Z35 ACCORDING TO EN10164

## FILLET WELDS

- UNLESS NOTED OTHERWISE, ALL FILLET WELDS SHALL BE CONTINUOUS.
- FILLET WELDS SHALL BE MADE FROM BOTH SIDES (SYMMETRICAL BEADS).
- EFFECTIVE THROAT THICKNESSES ARE DEFINED (THEY SHOULD BE MULTIPLIED BY 1.41 TO GET THE LEG LENGTHS).

## GROOVE WELDS

- ALL GROOVE WELDS SHALL BE MADE COMPLETE JOINT PENETRATION (CJP). BUTT JOINTS SHALL BE MADE WITH RUN-OFF PLATES. RUN-OFF PLATES SHALL BE REMOVED AFTER WELDING, GROUNDING THE EDGE IN THE DIRECTION OF STRESSES.

- STEEL TO BE PAINTED IN ACCORDANCE WITH PROJECT SPECIFICATIONS. (CORROSIVITY CATEGORY C4 DURABILITY VERY HIGH)
- QUALITY CONTROL IN ACCORDANCE WITH PROJECT SPECIFICATIONS. (EXECUTION LEVEL EXC3 ACCORDING TO EN1090-2:2019)

| SYMBOL | DESCRIPTION |
|---|---|
| e | FILLET WELD OF EFFECTIVE THROAT THICKNESS (e)mm. |
| e | FILLET WELD OF EFFECTIVE THROAT THICKNESS (e)mm, BOTH SIDES. |
| PP | PARTIAL PENETRATION WELD. |
| CJP | COMPLETE JOINT PENETRATION. |
| | ALL AROUND WELD. |
| | FIELD WELD. |
| UT | ULTRASONIC TESTING x% |

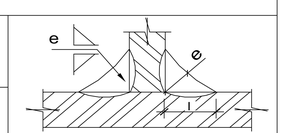


e=EFFECTIVE THROAT THICKNESS
l=LEG

## GENERAL NOTES:

1. ALL DIMENSIONS ARE IN MILLIMETERS UNLESS OTHERWISE SPECIFIED.
2. LEVELS ARE IN METERS
3. DESIGN SERVICE LIFE OF 100 YEARS.
4. FLANGES OF TOP AND BOTTOM CHORDS TO BE SUPPLIED WITH IMPROVED THROUGH THICKNESS PROPERTIES Z25 ACCORDING TO EN10164.

REFERENCE DRAWINGS

| | |
|---|---|
| 1 | 93M-BOA-NAT-LOT-26612 |
| 2 | |
| 3 | |
| 4 | |
| 5 | |
| 6 | |
| 7 | |
| 8 | |
| 9 | |
| 10 | |
| 11 | |

6TH OF OCTOBER CITY RAIL TRANSIT MONORAIL &
NEW CAPITAL CITY RAIL TRANSIT MONORAIL

The Authority
Hill International
Authority Consultant

ORASCOM CONSTRUCTION — Main Contractor

BOMBARDIER — Designer

SENER
SHAKER CONSULTANCY GROUP

CONTRACTOR
CONSULTANT

ENGINEERING HOUSE FOR CONSULTANCY

6 October Monorail
Engineering Unit
Valid For Construction

| SCALE | SHOP DRAWING | DATE |
|---|---|---|
| AS SHOWN | | 20.11.2024 |

| REV | DATE | BY | DESCRIPTION | CHK | APD |
|---|---|---|---|---|---|
| A | 20-11-24 | E.SH | ISSUE FOR APPROVAL | A.SH | M.M |

DRAWING TITLE:
6TH OF OCTOBER MONORAIL
**SHOP DRAWING FOR STRADDLE BENT 6OL11-22C2**
**STEEL RAFTER.**
SECTIONS DETAILS.09

| Project Code | Rubric | Initiator | Lot | Ref | Number | Revision |
|---|---|---|---|---|---|---|
| 9 3 M | 0 4 0 7 | A C C | 6 0 L 1 1 | D W G | 90455 | A |

Tekla Structures

REVIEWED WITH COMMENT
MONORAILS PROJECT

-Approval is subject to approval of coordination package between multi-disciplines.

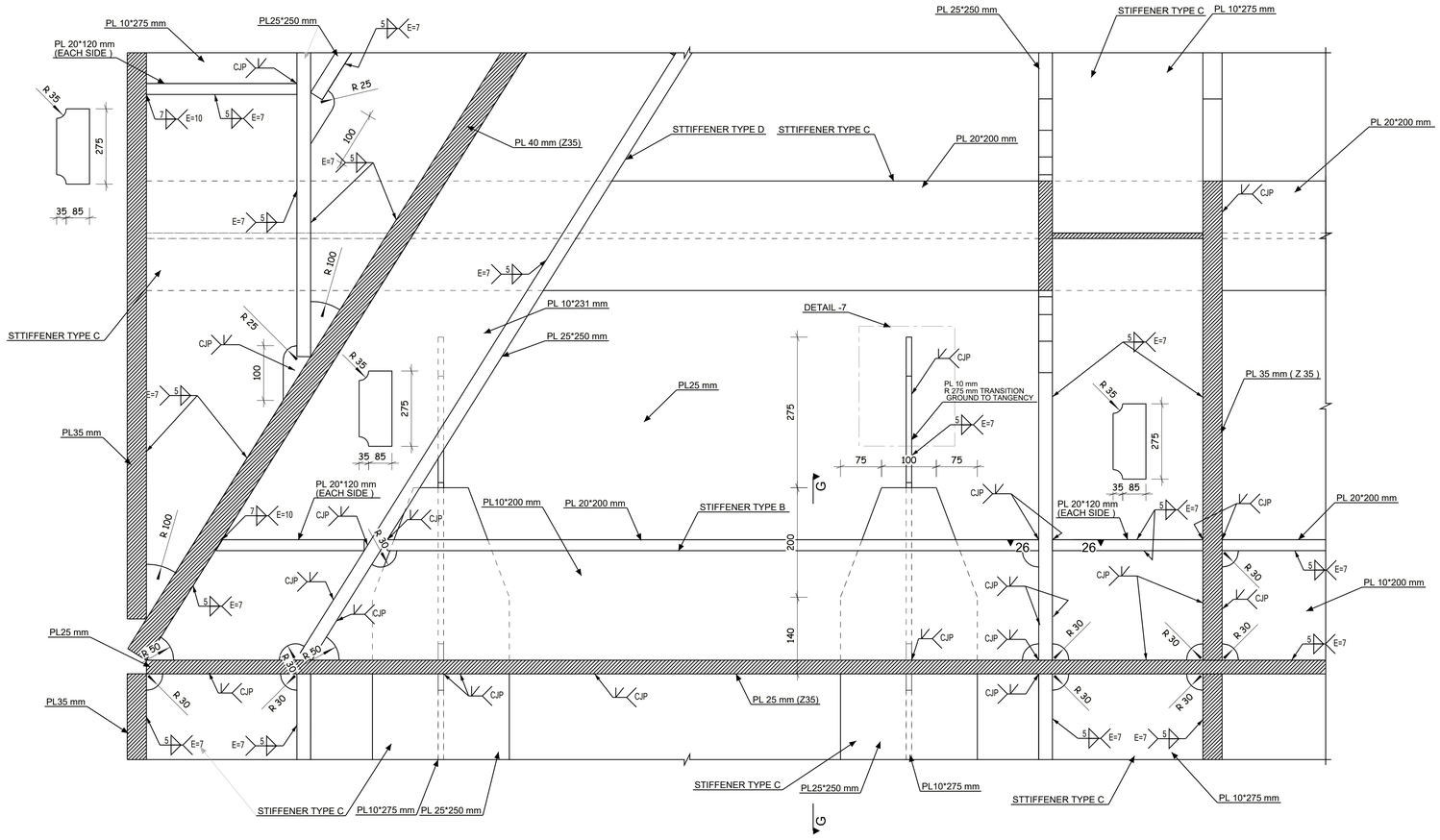


DETAIL - 5
SCALE 1:5

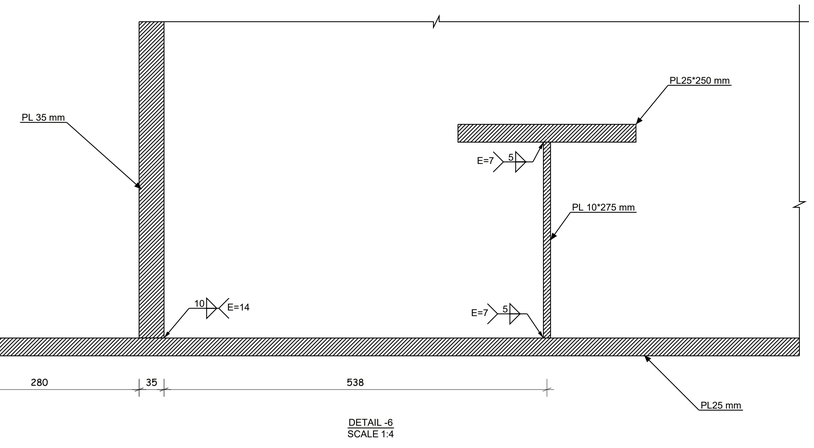


DETAIL -6
SCALE 1:4

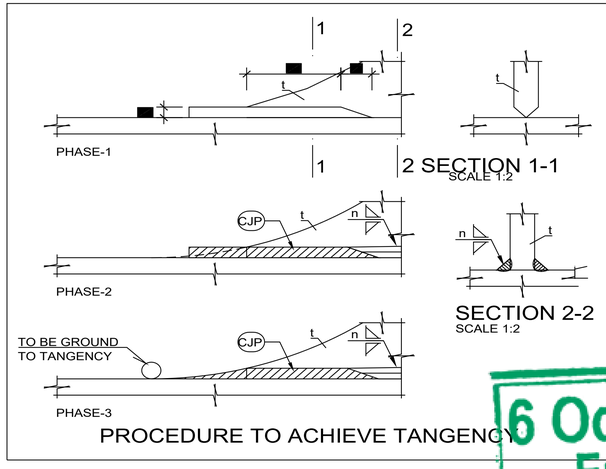


PROCEDURE TO ACHIEVE TANGENCY

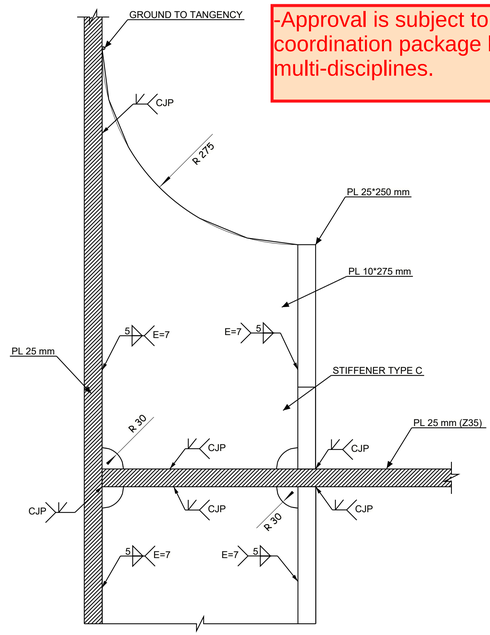


SECTION (G-G)
SCALE 1:4

SECTION 1-1
SCALE 1:2

SECTION 2-2
SCALE 1:2

Z35: PLATE TO BE SUPPLIED WITH IMPROVED THROUGH THICKNESS PROPERTIES Z35 ACCORDING TO EN10164

| SYMBOL | DESCRIPTION |
|---|---|
| e | FILLET WELD OF EFFECTIVE THROAT THICKNESS (e)mm. |
| e | FILLET WELD OF EFFECTIVE THROAT THICKNESS (e)mm, BOTH SIDES. |
| PP | PARTIAL PENETRATION WELD. |
| CJP | COMPLETE JOINT PENETRATION. |
| | GRIND SMOOTH. |
| | FIELD WELD. |
| UT x% | ULTRASONIC TEST AT x% |

e=EFFECTIVE THROAT THICKNESS
l=LEG

## GENERAL NOTES:

1. ALL DIMENSIONS ARE IN MILLIMETERS UNLESS OTHERWISE SPECIFIED.
2. LEVELS ARE IN METERS
3. DESIGN SERVICE LIFE OF 100 YEARS.
4. FLANGES OF TOP AND BOTTOM CHORDS TO BE SUPPLIED WITH IMPROVED THROUGH THICKNESS PROPERTIES Z25 ACCORDING TO EN10164.

| REFERENCE DRAWINGS | |
|---|---|
| 1 | 93M-BOA-NAT-LOT-26612 |
| 2 | |
| 3 | |
| 4 | |
| 5 | |
| 6 | |
| 7 | |
| 8 | |
| 9 | |
| 10 | |
| 11 | |

6TH OF OCTOBER CITY RAIL TRANSIT MONORAIL &
NEW CAPITAL CITY RAIL TRANSIT MONORAIL

The Authority — Hill International Authority Consultant

Main Contractor: ORASCOM CONSTRUCTION, BOMBARDIER

Designer: SENER, SHAKER CONSULTANCY GROUP

CONTRACTOR
CONSULTANT:

ENGINEERING HOUSE FOR CONSULTANCY

| SCALE | SHOP DRAWING | DATE |
|---|---|---|
| AS SHOWN | | 10-11-2024 |

| REV | DATE | BY | DESCRIPTION | CHK | APD |
|---|---|---|---|---|---|
| A | 20-11-24 | E.SH | ISSUE FOR APPROVAL | A.SH | M.M |

6 October Monorail
Engineering Unit
Valid For Construction

DRAWING TITLE:
6TH OF OCTOBER MONORAIL
SHOP DRAWING FOR STRADDLE BENT 6OL11-22C2
STEEL RAFTER.
SECTIONS DETAILS.10

| Project Code | Rubric | Initiator | Lot | Ref | Number | Revision |
|---|---|---|---|---|---|---|
| 93 | M04 | 07 | ACC60L11 | DWG | 90456 | A |

Trefa Structures

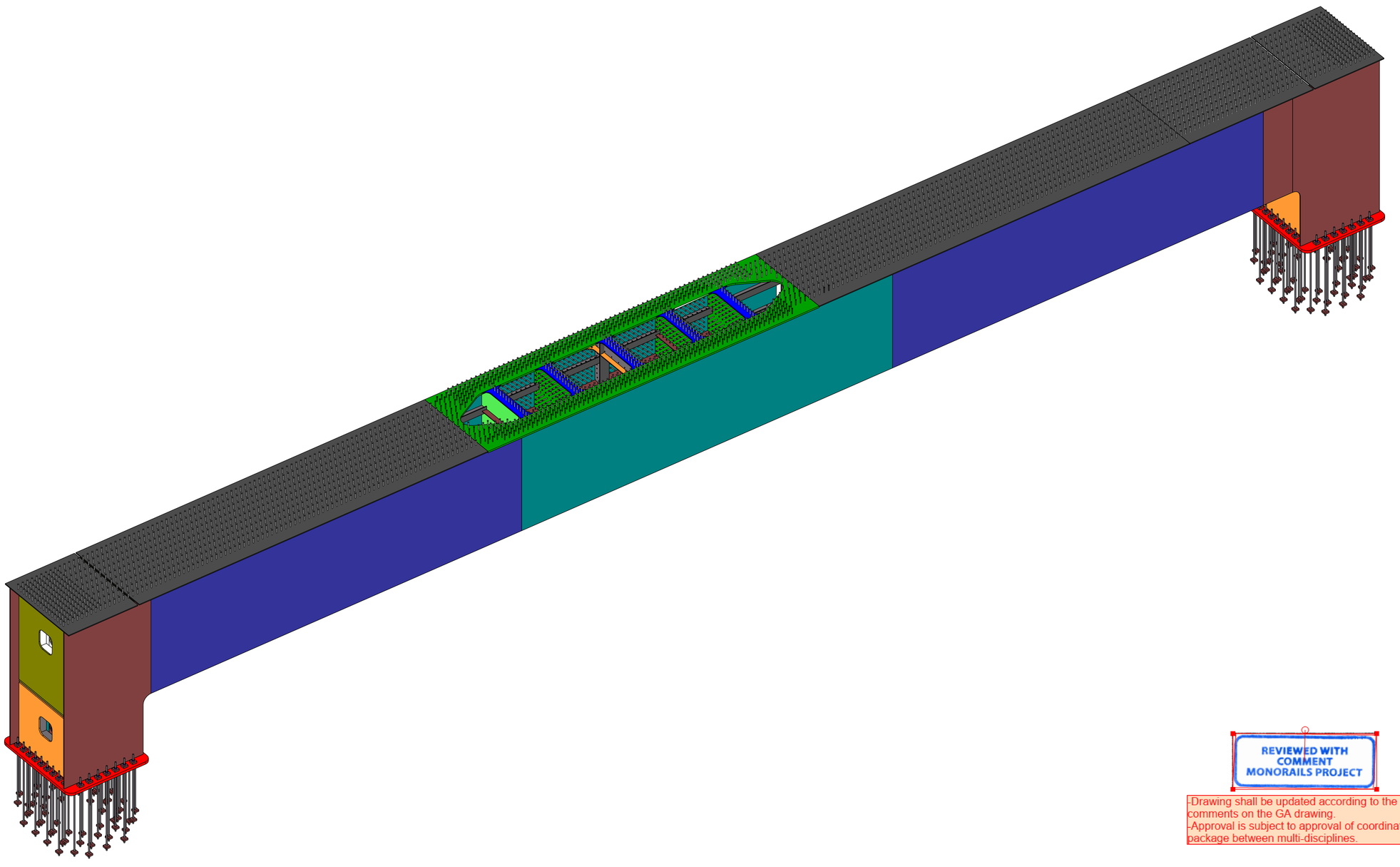


| ERECTION MARK : | | F.G1 | | | QTY : | 1 | NOS |
|---|---|---|---|---|---|---|---|
| POS NO. | QTY PER ASS'LY | SECTION | LENGTH | UNIT WEIGHT (Kg) | TOTAL QTY | TOTAL WEIGHT | GRADE |
| TF2 | 1 | FLT20*200 | 11045 | 347 | 1 | 347.0 | S355JN |
| BR1 | 5 | UPN200 | 2633 | 59 | 5 | 295.0 | S355JN |
| BR2 | 5 | UPN200 | 2633 | 59 | 5 | 295.0 | S355JN |
| DF1 | 14 | PL20*600.0 | 2360 | 114 | 14 | 1596.0 | S355JN |
| DF2 | 14 | PL20*300.0 | 2310 | 109 | 14 | 1526.0 | S355JN |
| DF3 | 5 | PL20*600.0 | 2360 | 112 | 5 | 560.0 | S355JN |
| DF4 | 10 | PL20*300.0 | 2310 | 107 | 10 | 1070.0 | S355JN |
| DF5 | 1 | PL20*2360.0 | 3150 | 1119 | 1 | 1119.0 | S355JN |
| DF6 | 4 | PL15*150.0 | 1920 | 34 | 4 | 136.0 | S355JN |
| DF7 | 1 | PL20*2360.0 | 3150 | 1119 | 1 | 1119.0 | S355JN |
| DF8 | 2 | PL20*1565.0 | 2360 | 536 | 2 | 1072.0 | S355JN |
| DF9 | 1 | PL20*2360.0 | 7294 | 2703 | 1 | 2703.0 | S355JN |
| DF10 | 2 | PL20*1565.0 | 2360 | 566 | 2 | 1132.0 | S355JN |
| DF11 | 2 | PL20*300.0 | 1145 | 54 | 2 | 108.0 | S355JN |
| DF12 | 2 | PL20*700.0 | 2360 | 117 | 2 | 234.0 | S355JN |
| DF13 | 2 | PL20*300.0 | 1120 | 53 | 2 | 106.0 | S355JN |
| DF14 | 3 | PL15*150.0 | 3894 | 69 | 3 | 207.0 | S355JN |
| DF15 | 2 | PL40*2350.0 | 3717 | 2640 | 2 | 5280.0 | S355K2N |
| DF16 | 5 | PL20*600.0 | 2360 | 112 | 5 | 560.0 | S355JN |
| DW1 | 15 | PL10*400.0 | 2360 | 72 | 15 | 1080.0 | S355JN |
| DW2 | 14 | PL10*400.0 | 2310 | 69 | 14 | 966.0 | S355JN |
| DW3 | 10 | PL10*400.0 | 1570 | 48 | 10 | 480.0 | S355JN |
| DW4 | 10 | PL10*400.0 | 1723 | 52 | 10 | 520.0 | S355JN |
| DW5 | 1 | PL10*425.0 | 2360 | 75 | 1 | 75.0 | S355JN |
| DW6 | 2 | PL10*400.0 | 1145 | 35 | 2 | 70.0 | S355JN |
| DW7 | 2 | PL10*400.0 | 1120 | 33 | 2 | 66.0 | S355JN |
| FP1 | 1 | PL25*2800.0 | 12000 | 6594 | 1 | 6594.0 | S355JN |
| FP2 | 5 | PL25*600.0 | 1500 | 92 | 5 | 460.0 | S355JN |
| FP3 | 1 | PL10*2800.0 | 10714 | 6137 | 1 | 6137.0 | S355K2N |
| FP4 | 6 | PL15*150.0 | 1680 | 30 | 6 | 180.0 | S355JN |
| FP5 | 4 | PL25*145.0 | 145 | 7 | 4 | 28.0 | S355JN |
| FP6 | 2 | PL25*2241.0 | 2800 | 1231 | 2 | 2462.0 | S355JN |
| FP7 | 1 | PL25*2800.0 | 3992 | 2194 | 1 | 2194.0 | S355JN |
| FP8 | 1 | PL25*2800.0 | 11286 | 6201 | 1 | 6201.0 | S355JN |
| FP9 | 1 | PL25*2360.0 | 5938 | 2745 | 1 | 2745.0 | S355JN |
| FP10 | 2 | PL25*2360.0 | 12000 | 5558 | 2 | 11116.0 | S355JN |
| FP11 | 1 | PL25*2360.0 | 12000 | 5553 | 1 | 5553.0 | S355JN |
| P1 | 2 | PL80*2660.0 | 3000 | 3969 | 2 | 7938.0 | S355K2N |
| PL1 | 84 | PL20*145.0 | 145 | 6 | 84 | 504.0 | S355JN |
| PL2 | 48 | PL10*135.0 | 180 | 2 | 48 | 96.0 | S355JN |
| PL3 | 20 | PL20*143.0 | 143 | 6 | 20 | 120.0 | S355JN |
| PL4 | 10 | PL15*750.0 | 1007 | 89 | 10 | 890.0 | S355JN |
| PL5 | 20 | PL5*67.0 | 313 | 1 | 20 | 20.0 | S355JN |
| PL6 | 8 | PL15*1100.0 | 1100 | 66 | 8 | 528.0 | S355JN |
| PL7 | 1 | PL25*300.0 | 1520 | 89 | 1 | 89.0 | S355JN |
| PL8 | 1 | PL10*400.0 | 1520 | 46 | 1 | 46.0 | S355JN |
| PL9 | 12 | PL10*275.0 | 770 | 17 | 12 | 204.0 | S355JN |
| PL10 | 12 | PL25*500.0 | 530 | 25 | 12 | 300.0 | S355JN |
| PL11 | 8 | PL24*250.0 | 315 | 13 | 8 | 104.0 | S355JN |
| PL12 | 8 | PL10*275.0 | 590 | 8 | 8 | 64.0 | S355JN |
| PL13 | 8 | PL25*230.0 | 770 | 35 | 8 | 280.0 | S355JN |
| PL14 | 32 | PL20*120.0 | 275 | 5 | 32 | 160.0 | S355JN |
| PL15 | 4 | PL20*120.0 | 271 | 5 | 4 | 20.0 | S355JN |
| PL16 | 4 | PL20*120.0 | 271 | 5 | 4 | 20.0 | S355JN |
| PL17 | 4 | PL20*120.0 | 272 | 5 | 4 | 20.0 | S355JN |
| PL18 | 4 | PL20*120.0 | 272 | 5 | 4 | 20.0 | S355JN |
| S.S1 | 1808 | ROD20 | 175 | 0 | 1808 | 0.0 | S275J2G3 |
| S.S2 | 2 | ROD20 | 170 | 0 | 2 | 0.0 | S275J2G3 |
| S1 | 2749 | ROD22 | 170 | 1 | 2749 | 2749.0 | S275J2G3 |
| TF1 | 17 | PL20*200.0 | 12000 | 377 | 17 | 6409.0 | S355JN |
| TF2 | 1 | PL20*200.0 | 11045 | 347 | 1 | 347.0 | S355JN |
| TF3 | 9 | PL20*200.0 | 981 | 31 | 9 | 279.0 | S355JN |
| TF4 | 8 | PL20*200.0 | 5693 | 179 | 8 | 1432.0 | S355JN |
| TF5 | 6 | PL20*200.0 | 3894 | 122 | 6 | 732.0 | S355JN |
| TF6 | 12 | PL20*200.0 | 1680 | 53 | 12 | 636.0 | S355JN |
| TF8 | 16 | PL25*250.0 | 1920 | 94 | 16 | 1504.0 | S355JN |
| TF9 | 4 | PL20*200.0 | 1507 | 45 | 4 | 180.0 | S355JN |
| TF10 | 4 | PL20*200.0 | 1006 | 30 | 4 | 120.0 | S355JN |
| TF11 | 4 | PL20*200.0 | 1002 | 29 | 4 | 116.0 | S355JN |
| TF12 | 4 | PL20*200.0 | 1503 | 45 | 4 | 180.0 | S355JN |
| TF13 | 4 | PL20*200.0 | 505 | 14 | 4 | 56.0 | S355JN |
| TF14 | 4 | PL20*200.0 | 1190 | 37 | 4 | 148.0 | S355JN |
| TF15 | 4 | PL20*200.0 | 1198 | 37 | 4 | 148.0 | S355JN |
| TF16 | 4 | PL25*250.0 | 2596 | 127 | 4 | 508.0 | S355JN |
| TF17 | 4 | PL24*250.0 | 2603 | 128 | 4 | 512.0 | S355JN |
| TF18 | 4 | PL25*250.0 | 2502 | 123 | 4 | 492.0 | S355JN |
| TF19 | 4 | PL25*250.0 | 2494 | 122 | 4 | 488.0 | S355JN |
| TF20 | 4 | PL20*200.0 | 501 | 14 | 4 | 56.0 | S355JN |
| TF21 | 1 | PL20*200.0 | 11019 | 346 | 1 | 346.0 | S355JN |
| TF22 | 2 | PL20*200.0 | 3752 | 118 | 2 | 236.0 | S355JN |
| TW1 | 4 | PL9*200.0 | 12000 | 188 | 4 | 752.0 | S355JN |
| TW2 | 7 | PL10*200.0 | 5693 | 89 | 7 | 623.0 | S355JN |
| TW3 | 2 | PL10*200.0 | 11245 | 174 | 2 | 348.0 | S355JN |
| TW4 | 4 | PL10*200.0 | 981 | 15 | 4 | 60.0 | S355JN |
| TW5 | 2 | PL10*200.0 | 3894 | 61 | 2 | 122.0 | S355JN |
| TW6 | 4 | PL10*200.0 | 1680 | 26 | 4 | 104.0 | S355JN |
| TW7 | 7 | PL10*200.0 | 12000 | 188 | 7 | 1316.0 | S355JN |
| TW8 | 2 | PL10*200.0 | 1680 | 24 | 2 | 48.0 | S355JN |
| TW9 | 2 | PL10*200.0 | 3894 | 56 | 2 | 112.0 | S355JN |
| TW10 | 2 | PL10*200.0 | 1680 | 24 | 2 | 48.0 | S355JN |
| TW12 | 16 | PL10*275.0 | 1920 | 41 | 16 | 656.0 | S355JN |
| TW13 | 4 | PL10*275.0 | 2997 | 61 | 4 | 244.0 | S355JN |
| TW14 | 4 | PL10*200.0 | 1301 | 20 | 4 | 80.0 | S355JN |
| TW15 | 4 | PL10*231.0 | 3002 | 51 | 4 | 204.0 | S355JN |
| TW16 | 4 | PL10*275.0 | 2990 | 61 | 4 | 244.0 | S355JN |
| TW17 | 4 | PL10*195.0 | 1448 | 22 | 4 | 88.0 | S355JN |
| TW18 | 4 | PL10*195.0 | 441 | 7 | 4 | 28.0 | S355JN |
| TW19 | 4 | PL10*195.0 | 947 | 14 | 4 | 56.0 | S355JN |
| TW20 | 4 | PL10*195.0 | 942 | 14 | 4 | 56.0 | S355JN |
| TW21 | 4 | PL10*195.0 | 446 | 7 | 4 | 28.0 | S355JN |
| TW22 | 4 | PL10*195.0 | 1443 | 22 | 4 | 88.0 | S355JN |
| TW23 | 4 | PL10*200.0 | 1324 | 20 | 4 | 80.0 | S355JN |
| TW24 | 4 | PL10*231.0 | 2977 | 50 | 4 | 200.0 | S355JN |
| TW25 | 4 | PL10*200.0 | 981 | 15 | 4 | 60.0 | S355JN |
| TW26 | 1 | PL10*200.0 | 5693 | 89 | 1 | 89.0 | S355JN |
| TW27 | 4 | PL10*200.0 | 1680 | 26 | 4 | 104.0 | S355JN |
| TW28 | 2 | PL10*200.0 | 3894 | 61 | 2 | 122.0 | S355JN |
| TW29 | 5 | PL10*200.0 | 12000 | 188 | 5 | 940.0 | S355JN |
| TW30 | 2 | PL10*200.0 | 3952 | 60 | 2 | 120.0 | S355JN |
| TW31 | 2 | PL9*200.0 | 12000 | 188 | 2 | 376.0 | S355JN |
| WP1 | 2 | PL20*948.0 | 3225 | 480 | 2 | 960.0 | S355JN |
| WP2 | 4 | PL25*2810.0 | 5095 | 2721 | 4 | 10884.0 | S355JN |
| WP3 | 1 | PL20*3225.0 | 12000 | 6071 | 1 | 6071.0 | S355JN |
| WP4 | 2 | PL35*1920.0 | 2350 | 1150 | 2 | 2300.0 | S355K2N |
| WP5 | 2 | PL35*2350.0 | 3082 | 1900 | 2 | 3800.0 | S355K2N |
| WP6 | 2 | PL35*1920.0 | 2350 | 1240 | 2 | 2480.0 | S355K2N |
| WP7 | 2 | PL35*2350.0 | 3075 | 1895 | 2 | 3790.0 | S355K2N |
| WP8 | 1 | PL20*3225.0 | 12000 | 6039 | 1 | 6039.0 | S355JN |
| WP9 | 2 | PL20*3225.0 | 12000 | 6076 | 2 | 12152.0 | S355JN |
| WP10 | 1 | PL20*3225.0 | 12000 | 6042 | 1 | 6042.0 | S355JN |
| WP11 | 1 | PL20*3225.0 | 12000 | 6067 | 1 | 6067.0 | S355JN |

| ERECTION MARK : | | FG2 | | | QTY : | 56 | NOS |
|---|---|---|---|---|---|---|---|
| POS NO. | QTY PER ASS'LY | SECTION | LENGTH | UNIT WEIGHT (Kg) | TOTAL QTY | TOTAL WEIGHT | GRADE |
| R1 | 1 | ROD36 | 2750 | 21 | 3136 | 65800.0 | S355JN |
| N3 | 2 | PD72*18 | 36 | 1 | 6272 | 6152.0 | S355JN |
| PL19 | 1 | PL50*140.0 | 140 | 7 | 3136 | 22792.0 | S355K2N |
| PL20 | 1 | PL140*50.0 | 140 | 7 | 3136 | 22792.0 | S355K2N |

| ERECTION MARK : | | FG3 | | | QTY : | 64 | NOS |
|---|---|---|---|---|---|---|---|
| POS NO. | QTY PER ASS'LY | SECTION | LENGTH | UNIT WEIGHT (Kg) | TOTAL QTY | TOTAL WEIGHT | GRADE |
| R2 | 1 | ROD36 | 2250 | 17 | 4096 | 70336.0 | S355JN |
| N3 | 2 | PD72*18 | 36 | 1 | 8192 | 8606.0 | S355JN |
| PL20 | 1 | PL140*50.0 | 140 | 7 | 4096 | 29760.0 | S355K2N |
| PL21 | 1 | PL50*140.0 | 140 | 7 | 4096 | 29760.0 | S355K2N |
| | | | | TOTAL WEIGHT : | | 416518.0 | |

REVIEWED WITH COMMENT
MONORAILS PROJECT

-Drawing shall be updated according to the comments on the GA drawing.
-Approval is subject to approval of coordination package between multi-disciplines.

1 Nos. Top REQUIRED AS DRAWN MARKED F.G1

6 October Monorail
Engineering Unit
Valid For Construction

## GENERAL NOTES:

1. ALL DIMENSIONS ARE IN MILLIMETERS UNLESS OTHERWISE SPECIFIED.
2. LEVELS ARE IN METERS
3. DESIGN SERVICE LIFE OF 100 YEARS.
4. FLANGES OF TOP AND BOTTOM CHORDS TO BE SUPPLIED WITH IMPROVED THROUGH THICKNESS PROPERTIES Z25 ACCORDING TO EN10164.

REFERENCE DRAWINGS

| | |
|---|---|
| 1 | 93M-BOA-NAT-LOT-26612 |
| 2 | |
| 3 | |
| 4 | |
| 5 | |
| 6 | |
| 7 | |
| 8 | |
| 9 | |
| 10 | |
| 11 | |

6TH OF OCTOBER CITY RAIL TRANSIT MONORAIL &
NEW CAPITAL CITY RAIL TRANSIT MONORAIL

The Authority | Hill International Authority Consultant | ORASCOM CONSTRUCTION | BOMBARDIER Main Contractor | SENER SHAKER CONSULTANCY GROUP Designer

CONTRACTOR
CONSULTANT
ENGINEERING HOUSE FOR CONSULTANCY

SCALE: AS SHOWN | SHOP DRAWING | DATE 20.11.2024

| REV | DATE | BY | DESCRIPTION | CHK | APD |
|---|---|---|---|---|---|
| A | 20-11-24 | E.SH | ISSUE FOR APPROVAL | A.SH | M.M |

DRAWING TITLE:
6TH OF OCTOBER MONORAIL
SHOP DRAWING FOR STRADDLE BENT 6OL11-22C2
STEEL RAFTER.
3D-VIEW

| Project Code | Rubric | Initiator | Lot | Ref | Number | Revision |
|---|---|---|---|---|---|---|
| 9 3 M | 0 4 0 7 | A C C | 6 0 L 1 1 | D W G | 90457 | A |

REVIEWED WITH COMMENT
MONORAILS PROJECT

-Drawing shall be updated according to the comments on the GA drawing.
-Approval is subject to approval of coordination package between multi-disciplines.

-Please check apply camber at assembly drawing .

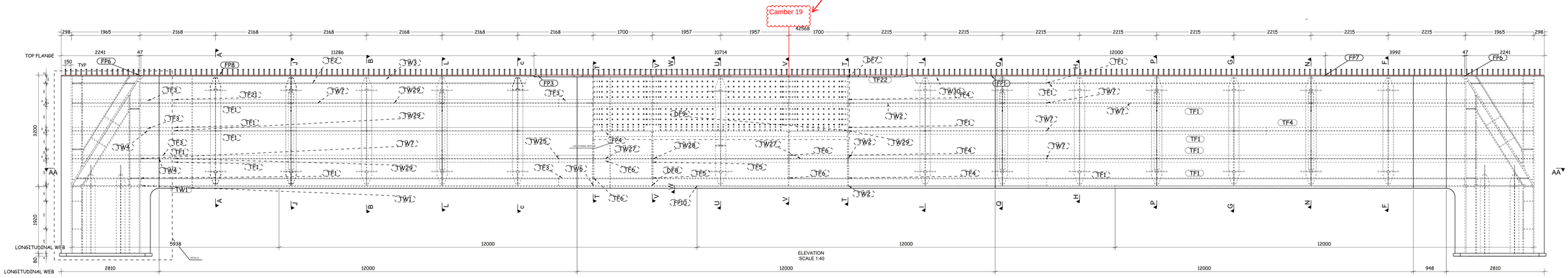


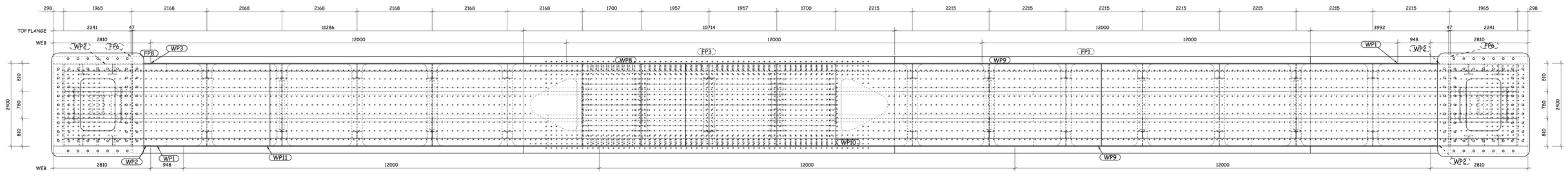


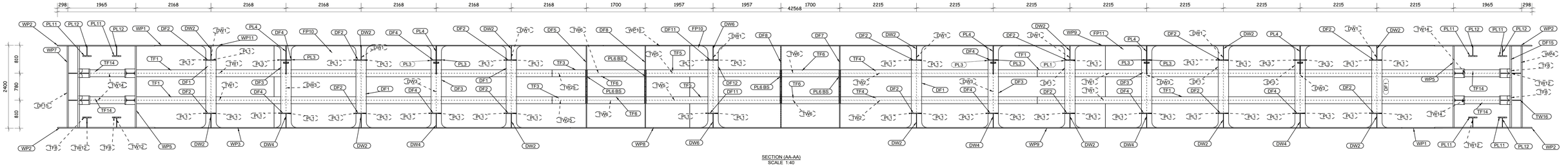


1 Nos. Top REQUIRED AS DRAWN MARKED F.G1

6 October: Monorail Engineering Unit
Valid For Construction

## GENERAL NOTES:

1. ALL DIMENSIONS ARE IN MILLIMETERS UNLESS OTHERWISE SPECIFIED.
2. LEVELS ARE IN METERS
3. DESIGN SERVICE LIFE OF 100 YEARS.
4. FLANGES OF TOP AND BOTTOM CHORDS TO BE SUPPLIED WITH IMPROVED THROUGH THICKNESS PROPERTIES Z25 ACCORDING TO EN10164.

REFERENCE DRAWINGS

| | |
|---|---|
| 1 | 93M-BOA-NAT-LOT-26612 |
| 2 | |
| 3 | |
| 4 | |
| 5 | |
| 6 | |
| 7 | |
| 8 | |
| 9 | |
| 10 | |
| 11 | |

6TH OF OCTOBER CITY RAIL TRANSIT MONORAIL &
NEW CAPITAL CITY RAIL TRANSIT MONORAIL

The Authority
Hill International
Authority Consultant
Main Contractor
Designer

CONTRACTOR
CONSULTANT
ENGINEERING HOUSE FOR CONSULTANCY

SCALE: AS SHOWN | SHOP DRAWING | DATE: 20.11.2024

| REV | DATE | BY | DESCRIPTION | CHK | APD |
|---|---|---|---|---|---|
| A | 20-11-24 | E.SH | ISSUE FOR APPROVAL | A.SH | M.M |

DRAWING TITLE:
6TH OF OCTOBER MONORAIL
**SHOP DRAWING FOR STRADDLE BENT 6OL11-22C2**
**STEEL RAFTER.**
Sections Details-01

| Project Code | Rubric | Initiator | Lot | Ref | Number | Revision |
|---|---|---|---|---|---|---|
| 9 3 M | 0 4 0 7 | A C C | 6 0 L 1 1 | D W G | 90458 | A |

REVIEWED WITH COMMENT
MONORAILS PROJECT

-Drawing shall be updated according to the comments on the GA drawing.
-Approval is subject to approval of coordination package between multi-disciplines.

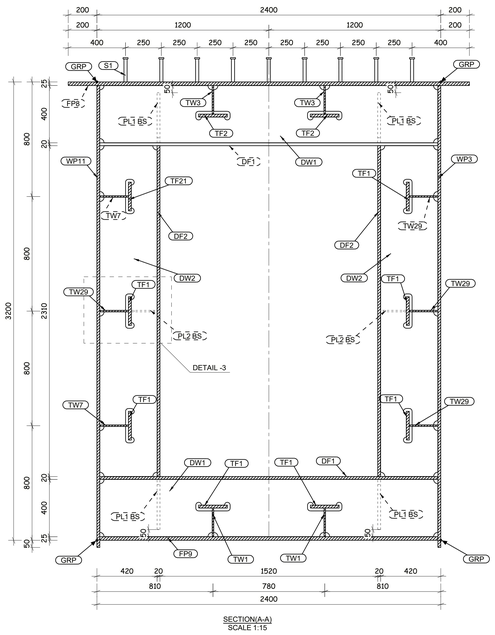


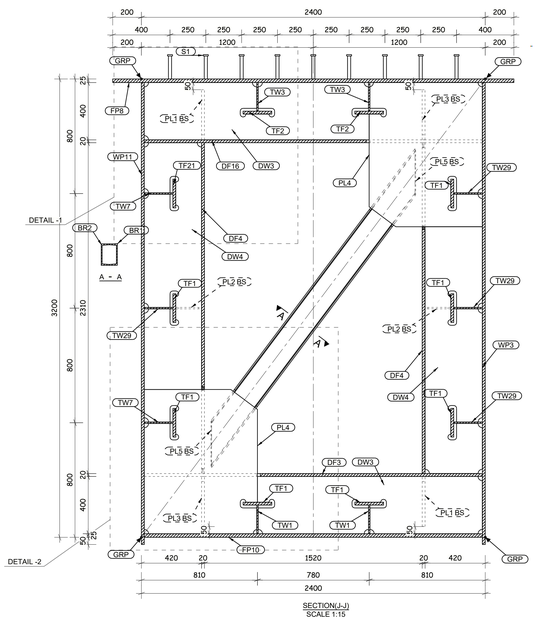


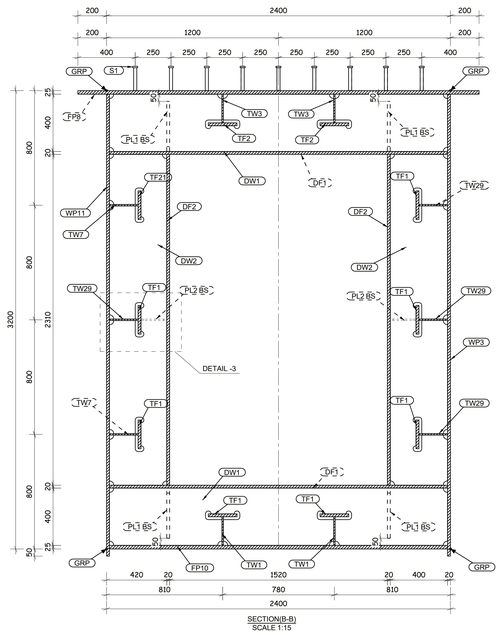


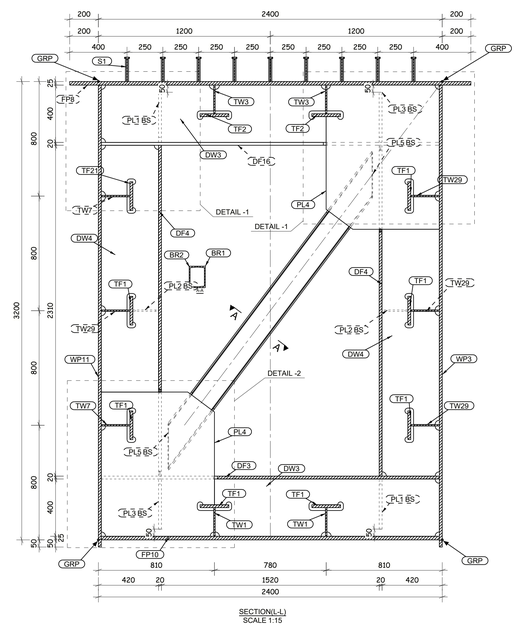


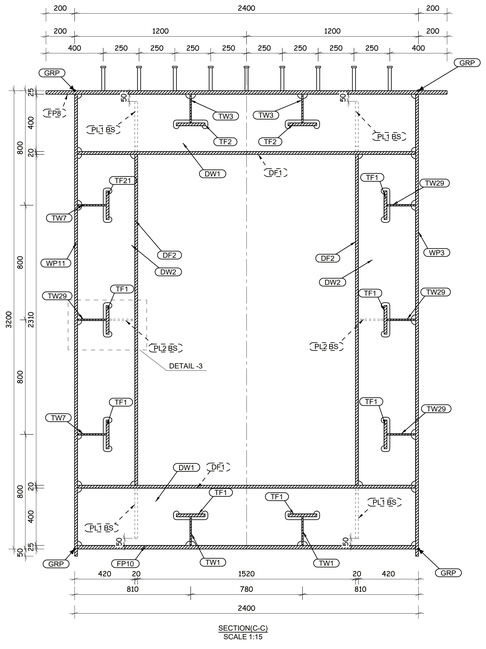


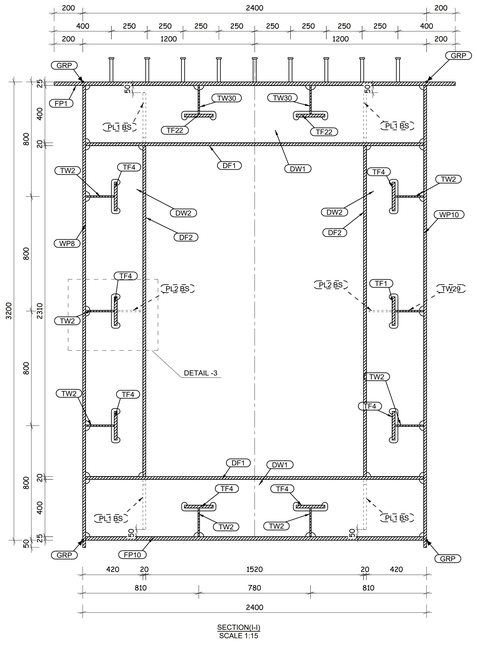


1 Nos. Top REQUIRED AS DRAWN MARKED F.G1

## GENERAL NOTES:

1. ALL DIMENSIONS ARE IN MILLIMETERS UNLESS OTHERWISE SPECIFIED.
2. LEVELS ARE IN METERS
3. DESIGN SERVICE LIFE OF 100 YEARS.
4. FLANGES OF TOP AND BOTTOM CHORDS TO BE SUPPLIED WITH IMPROVED THROUGH THICKNESS PROPERTIES Z25 ACCORDING TO EN10164.

REFERENCE DRAWINGS

| | |
|---|---|
| 1 | 93M-BOA-NAT-LOT-26612 |
| 2 | |
| 3 | |
| 4 | |
| 5 | |
| 6 | |
| 7 | |
| 8 | |
| 9 | |
| 10 | |
| 11 | |

6TH OF OCTOBER CITY RAIL TRANSIT MONORAIL &
NEW CAPITAL CITY RAIL TRANSIT MONORAIL

The Authority
Hill International
Authority Consultant
ORASCOM CONSTRUCTION
BOMBARDIER
Main Contractor
SENER
SHAKER CONSULTANCY GROUP
Designer

CONTRACTOR
CONSULTANT
ENGINEERING HOUSE FOR CONSULTANCY

6 October Monorail
Engineering Unit
Valid For Construction

| SCALE | SHOP DRAWING | DATE |
|---|---|---|
| AS SHOWN | | 20.11.2024 |

| REV | DATE | BY | DESCRIPTION | CHK | APD |
|---|---|---|---|---|---|
| A | 20-11-24 | E.SH | ISSUE FOR APPROVAL | A.SH | M.M |

DRAWING TITLE:
6TH OF OCTOBER MONORAIL
**SHOP DRAWING FOR STRADDLE BENT 6OL11-22C2**
**STEEL RAFTER.**
Sections Details-02

| Project Code | Rubric | Initiator | Lot | Ref | Number | Revision |
|---|---|---|---|---|---|---|
| 9 3 M | 0 4 0 7 | A C C | 6 0 L 1 1 | D W G | 90459 | A |

Area Structures

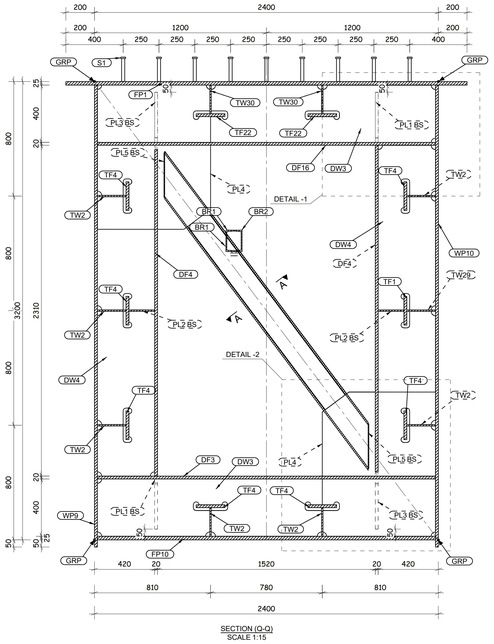


SECTION (Q-Q)
SCALE 1:15

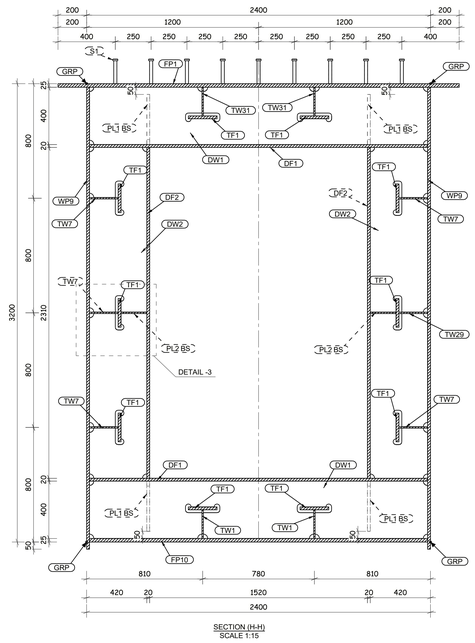


SECTION (H-H)
SCALE 1:15

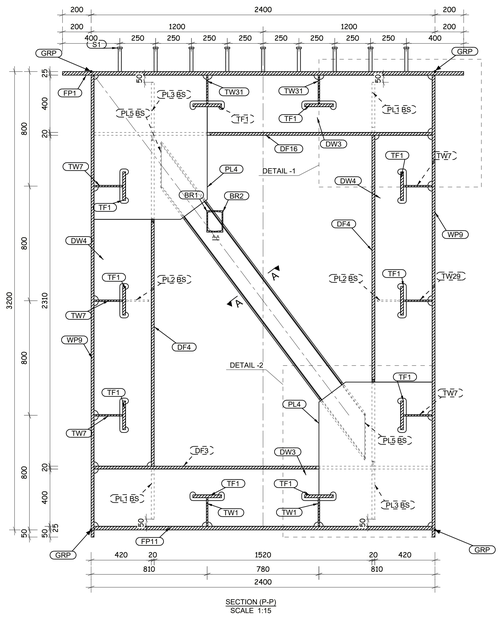


SECTION (P-P)
SCALE 1:15

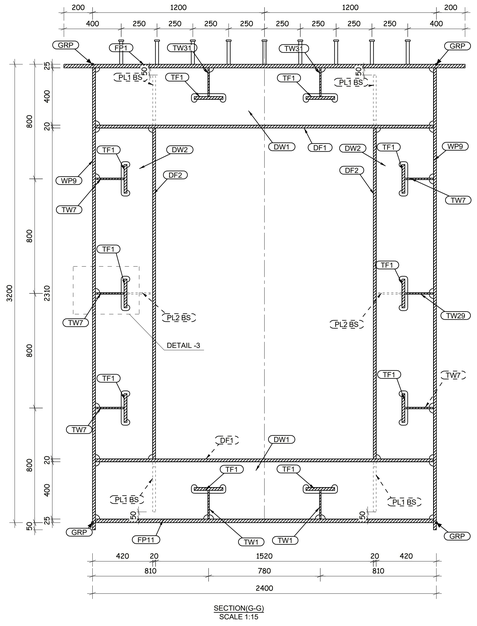


SECTION(G-G)
SCALE 1:15

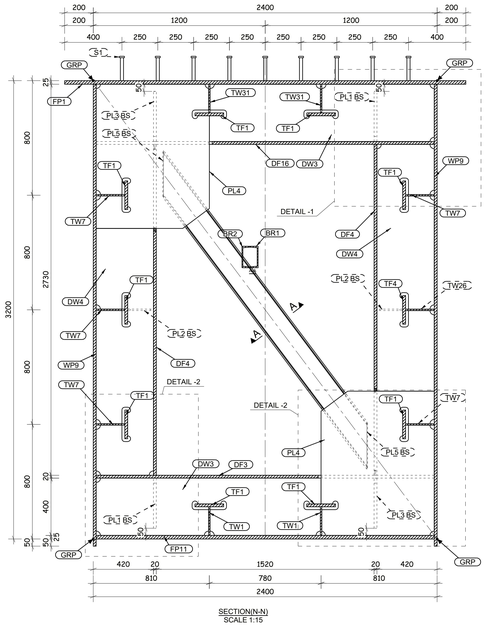


SECTION(N-N)
SCALE 1:15

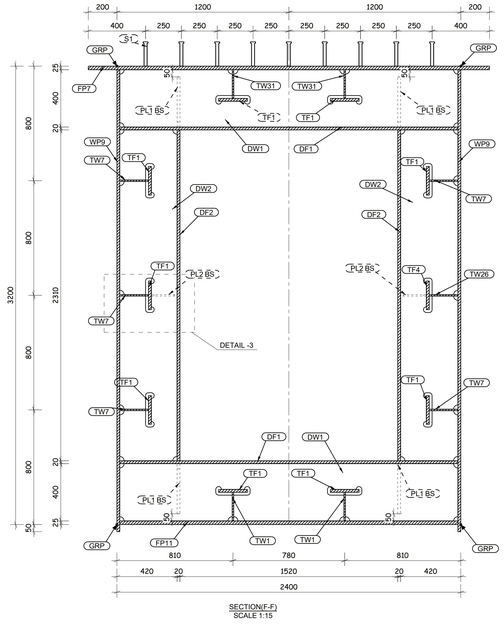


SECTION(F-F)
SCALE 1:15

REVIEWED WITH COMMENT
MONORAILS PROJECT

-Drawing shall be updated according to the comments on the GA drawing.
-Approval is subject to approval of coordination package between multi-disciplines.

1 Nos. Top REQUIRED AS DRAWN MARKED F.G1

## GENERAL NOTES:

1. ALL DIMENSIONS ARE IN MILLIMETERS UNLESS OTHERWISE SPECIFIED.
2. LEVELS ARE IN METERS
3. DESIGN SERVICE LIFE OF 100 YEARS.
4. FLANGES OF TOP AND BOTTOM CHORDS TO BE SUPPLIED WITH IMPROVED THROUGH THICKNESS PROPERTIES Z25 ACCORDING TO EN10164.

REFERENCE DRAWINGS

| | |
|---|---|
| 1 | 93M-BOA-NAT-LOT-26612 |
| 2 | |
| 3 | |
| 4 | |
| 5 | |
| 6 | |
| 7 | |
| 8 | |
| 9 | |
| 10 | |
| 11 | |

6TH OF OCTOBER CITY RAIL TRANSIT MONORAIL &
NEW CAPITAL CITY RAIL TRANSIT MONORAIL

The Authority | Hill International Authority Consultant | ORASCOM CONSTRUCTION | BOMBARDIER Main Contractor | SENER SHAKER CONSULTING GROUP Designer

6 October Monorail Engineering Unit
Valid For Construction

CONTRACTOR
CONSULTANT
ENGINEERING HOUSE FOR CONSULTANCY

SCALE: AS SHOWN | SHOP DRAWING | DATE 20.11.2024

| REV | DATE | BY | DESCRIPTION | CHK | APD |
|---|---|---|---|---|---|
| A | 20-11-24 | E.SH | ISSUE FOR APPROVAL | A.SH | M.M |

DRAWING TITLE:
6TH OF OCTOBER MONORAIL
**SHOP DRAWING FOR STRADDLE BENT 6OL11-22C2**
**STEEL RAFTER.**
Sections Details-03

| Project Code | Rubric | Initiator | Lot | Ref | Number | Revision |
|---|---|---|---|---|---|---|
| 93 | M0407 | ACC | 60L11 | DWG | 90460 | A |

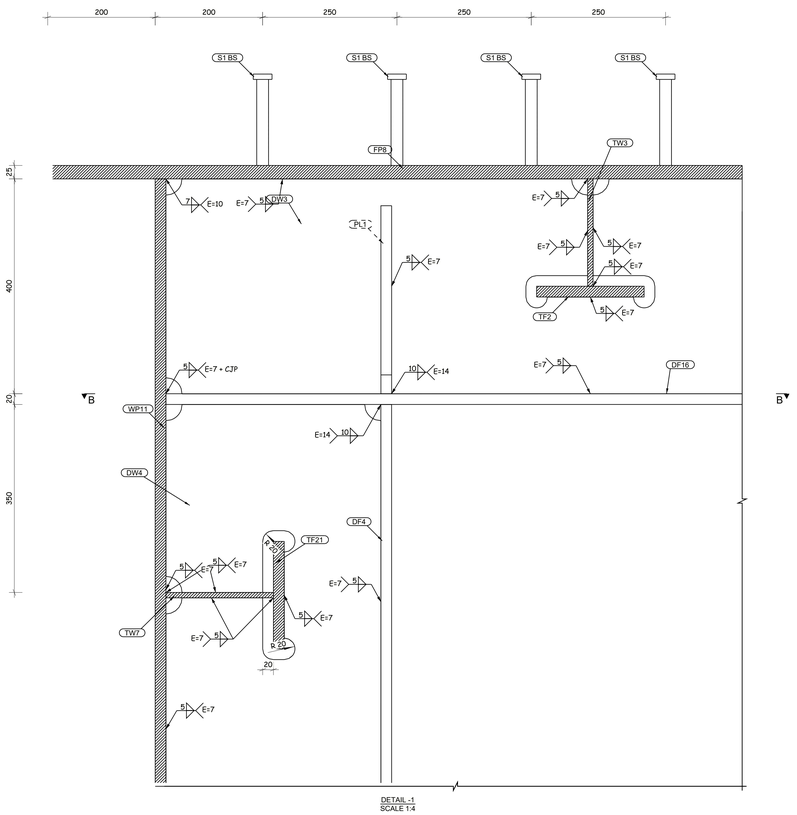


DETAIL -1
SCALE 1:4

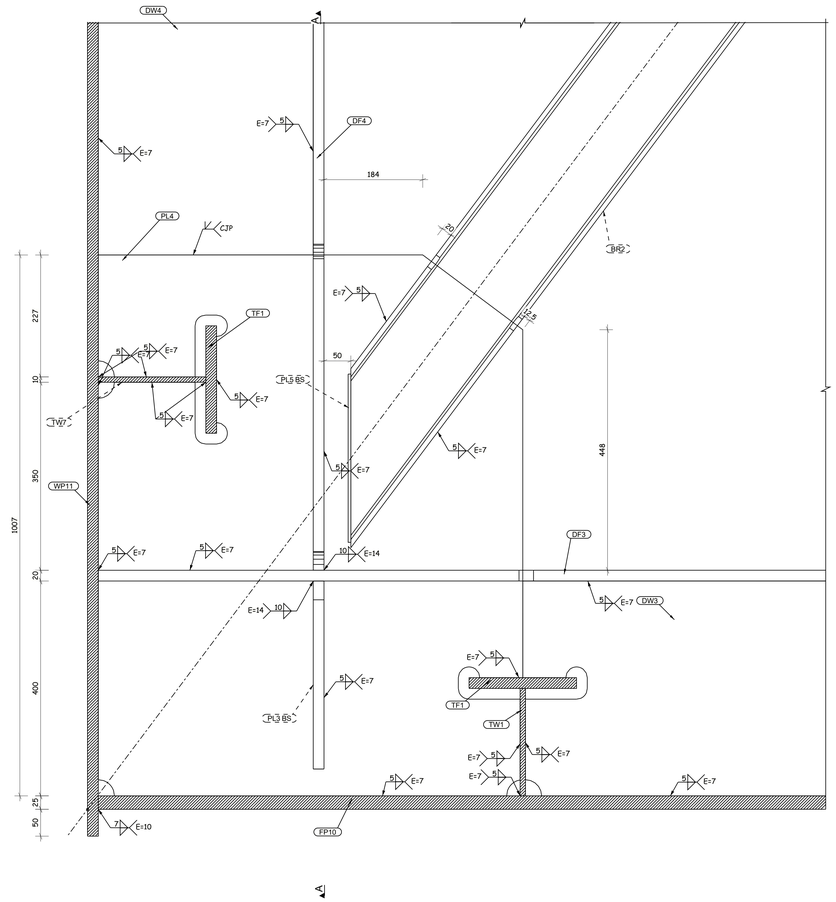


DETAIL -2
SCALE 1:4

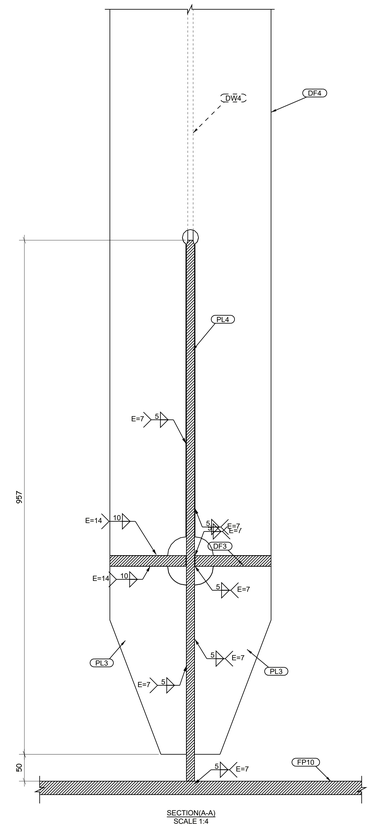


SECTION(A-A)
SCALE 1:4

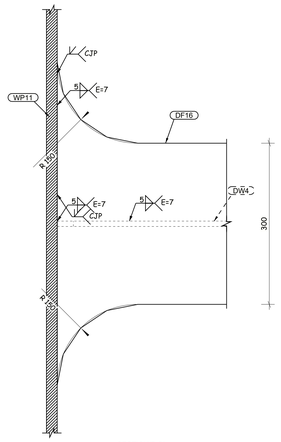


SECTION(B-B)
SCALE 1:4

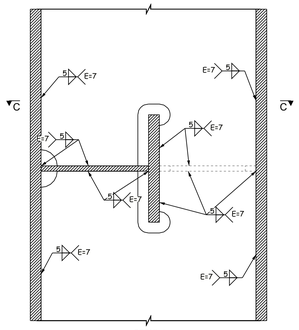


DETAIL-1
SCALE 1:4

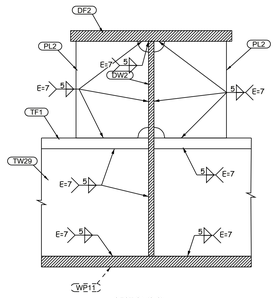


SECTION(C-C)
SCALE 1:4

1 Nos. Top REQUIRED AS DRAWN MARKED F.G1

REVIEWED WITH COMMENT
MONORAILS PROJECT

-Drawing shall be updated according to the comments on the GA drawing.
-Approval is subject to approval of coordination package between multi-disciplines.

6 October Monorail
Engineering Unit
Valid For Construction

## GENERAL NOTES:

1. ALL DIMENSIONS ARE IN MILLIMETERS UNLESS OTHERWISE SPECIFIED.
2. LEVELS ARE IN METERS
3. DESIGN SERVICE LIFE OF 100 YEARS.
4. FLANGES OF TOP AND BOTTOM CHORDS TO BE SUPPLIED WITH IMPROVED THROUGH THICKNESS PROPERTIES Z25 ACCORDING TO EN10164.

REFERENCE DRAWINGS

| | |
|---|---|
| 1 | 93M-BOA-NAT-LOT-26612 |
| 2 | |
| 3 | |
| 4 | |
| 5 | |
| 6 | |
| 7 | |
| 8 | |
| 9 | |
| 10 | |
| 11 | |

6TH OF OCTOBER CITY RAIL TRANSIT MONORAIL &
NEW CAPITAL CITY RAIL TRANSIT MONORAIL

The Authority — Hill International Authority Consultant
Main Contractor: ORASCOM CONSTRUCTION / BOMBARDIER
Designer: SENER / SHAKER CONSULTANCY GROUP

CONTRACTOR
CONSULTANT: ENGINEERING HOUSE FOR CONSULTANCY

| SCALE | SHOP DRAWING | DATE |
|---|---|---|
| AS SHOWN | | 20.11.2024 |

| REV | DATE | BY | DESCRIPTION | CHK | APD |
|---|---|---|---|---|---|
| A | 20-11-24 | E.SH | ISSUE FOR APPROVAL | A.SH | M.M |

DRAWING TITLE:
6TH OF OCTOBER MONORAIL
**SHOP DRAWING FOR STRADDLE BENT 6OL11-22C2**
**STEEL RAFTER.**
Sections Details-04

| Project Code | Rubric | Initiator | Lot | Ref | Number | Revision |
|---|---|---|---|---|---|---|
| 93MOA07 | ACC | 60L11 | DWG | 90461 | A |

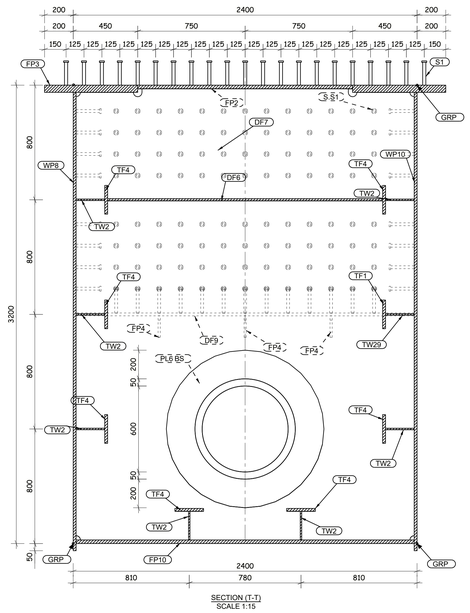


SECTION (T-T)
SCALE 1:15

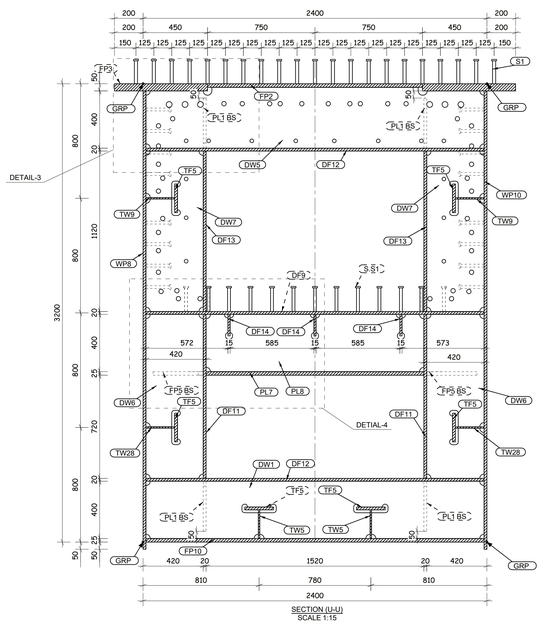


SECTION (U-U)
SCALE 1:15

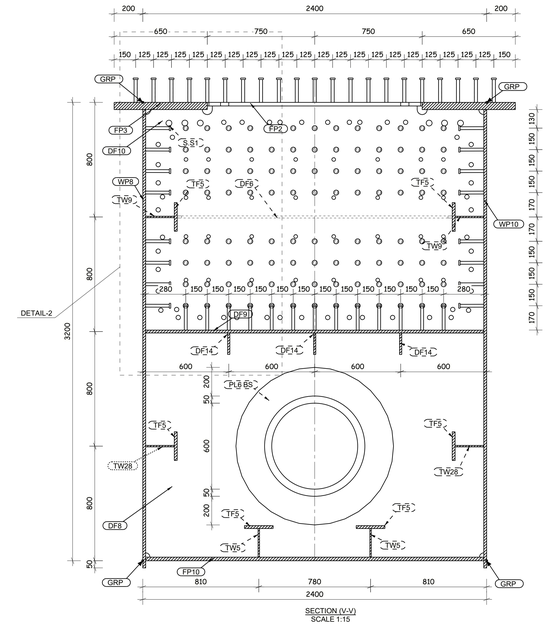


SECTION (V-V)
SCALE 1:15

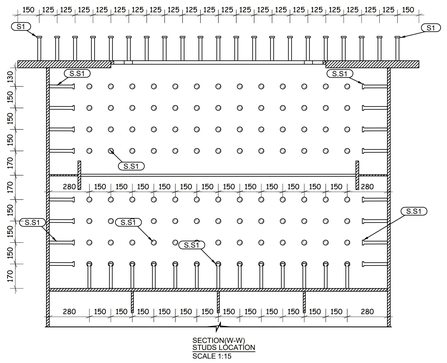


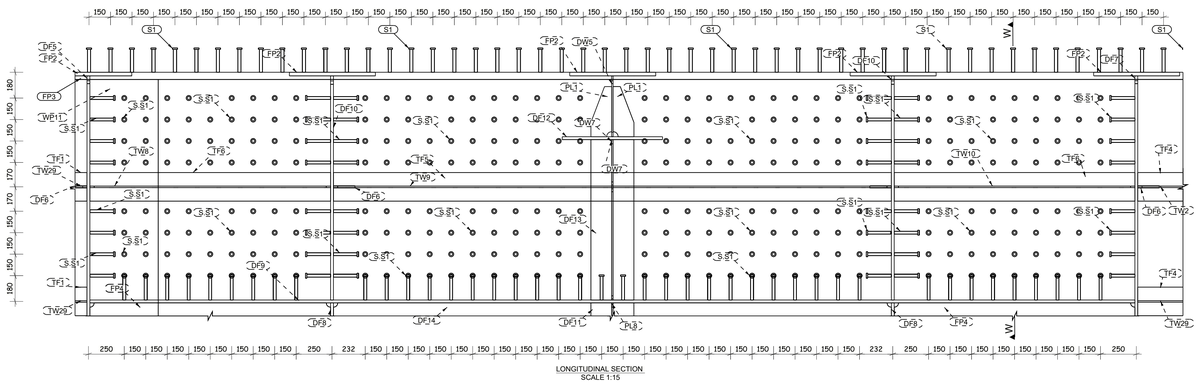


REVIEWED WITH COMMENT
MONORAILS PROJECT

-Drawing shall be updated according to the comments on the GA drawing.
-Approval is subject to approval of coordination package between multi-disciplines.

1 Nos. Top REQUIRED AS DRAWN MARKED F.G1

6 October Monorail
Engineering Unit
Valid For Construction

## GENERAL NOTES:

1. ALL DIMENSIONS ARE IN MILLIMETERS UNLESS OTHERWISE SPECIFIED.
2. LEVELS ARE IN METERS
3. DESIGN SERVICE LIFE OF 100 YEARS.
4. FLANGES OF TOP AND BOTTOM CHORDS TO BE SUPPLIED WITH IMPROVED THROUGH THICKNESS PROPERTIES Z25 ACCORDING TO EN10164.

REFERENCE DRAWINGS

| | |
|---|---|
| 1 | 93M-BOA-NAT-LOT-26612 |
| 2 | |
| 3 | |
| 4 | |
| 5 | |
| 6 | |
| 7 | |
| 8 | |
| 9 | |
| 10 | |
| 11 | |

6TH OF OCTOBER CITY RAIL TRANSIT MONORAIL &
NEW CAPITAL CITY RAIL TRANSIT MONORAIL

The Authority
Hill International
Authority Consultant

ORASCOM CONSTRUCTION
BOMBARDIER
Main Contractor

SENER
SHAKER CONSULTANCY GROUP
Designer

CONTRACTOR
CONSULTANT
ENGINEERING HOUSE FOR CONSULTANCY

SCALE: AS SHOWN | SHOP DRAWING | DATE: 20.11.2024

| REV | DATE | BY | DESCRIPTION | CHK | APD |
|---|---|---|---|---|---|
| A | 20-11-24 | E.SH | ISSUE FOR APPROVAL | A.SH | M.M |

DRAWING TITLE:
6TH OF OCTOBER MONORAIL
**SHOP DRAWING FOR STRADDLE BENT 6OL11-22C2**
**STEEL RAFTER.**
Sections Details-05

| Project Code | Rubric | Initiator | Lot | Ref | Number | Revision |
|---|---|---|---|---|---|---|
| 93MBOA | NAT | ACC | 6OL11 | DWG | 90462 | A |

REVIEWED WITH COMMENT
MONORAILS PROJECT

-Drawing shall be updated according to the comments on the GA drawing.
-Approval is subject to approval of coordination package between multi-disciplines.

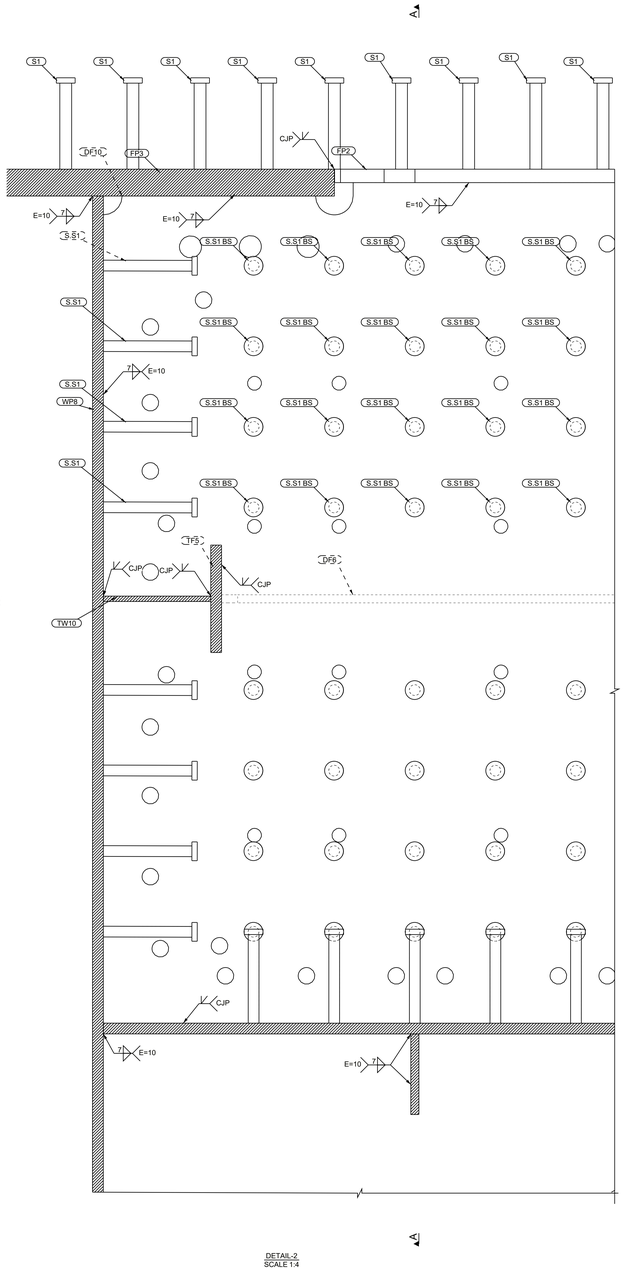


DETAIL-2
SCALE 1:4

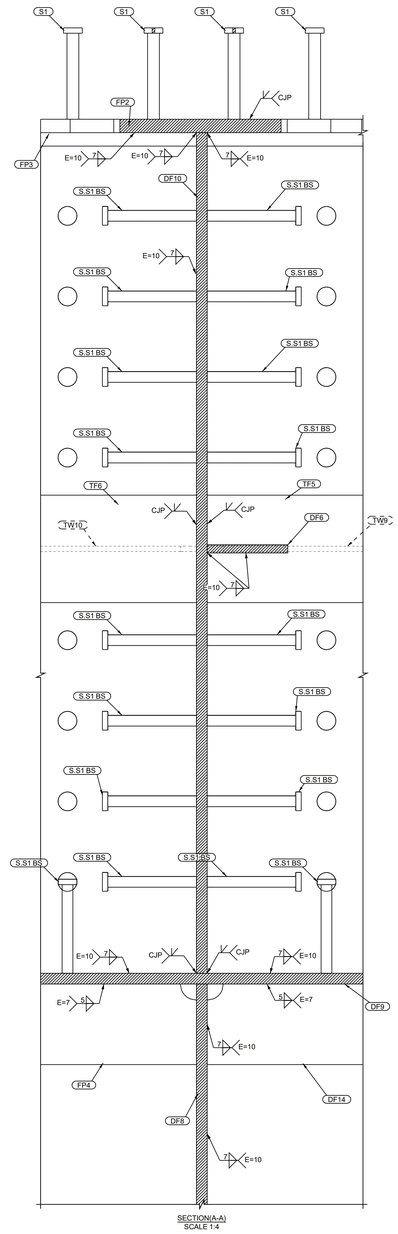


SECTION(A-A)
SCALE 1:4

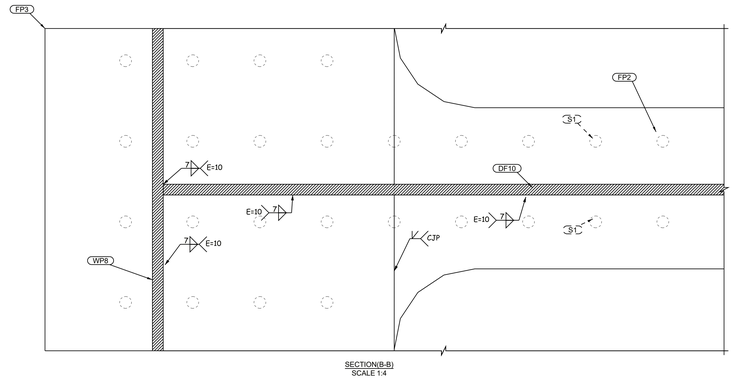


SECTION(B-B)
SCALE 1:4

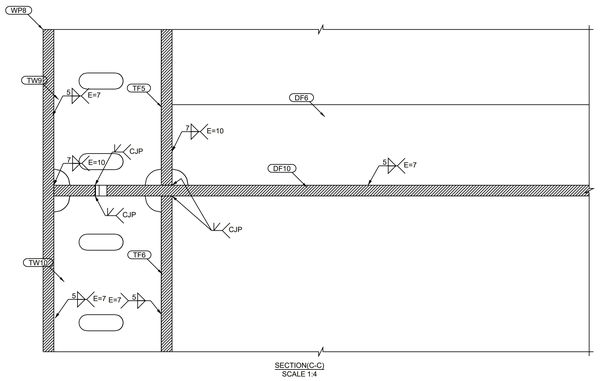


SECTION(C-C)
SCALE 1:4

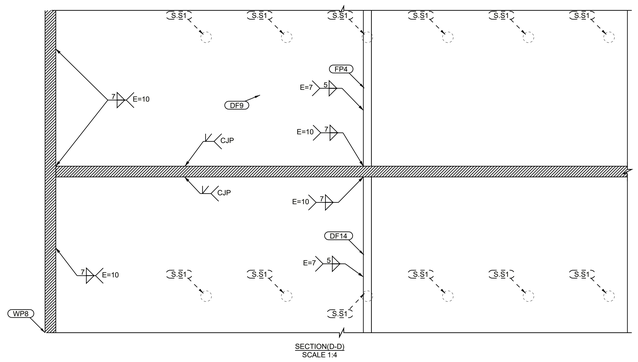


SECTION(D-D)
SCALE 1:4

1 Nos. Top REQUIRED AS DRAWN MARKED F.G1

6 October: Monorail Engineering Unit
Valid For Construction

## GENERAL NOTES:

1. ALL DIMENSIONS ARE IN MILLIMETERS UNLESS OTHERWISE SPECIFIED.
2. LEVELS ARE IN METERS
3. DESIGN SERVICE LIFE OF 100 YEARS.
4. FLANGES OF TOP AND BOTTOM CHORDS TO BE SUPPLIED WITH IMPROVED THROUGH THICKNESS PROPERTIES Z25 ACCORDING TO EN10164.

REFERENCE DRAWINGS

| | |
|---|---|
| 1 | 93M-BOA-NAT-LOT-26612 |
| 2 | |
| 3 | |
| 4 | |
| 5 | |
| 6 | |
| 7 | |
| 8 | |
| 9 | |
| 10 | |
| 11 | |

6TH OF OCTOBER CITY RAIL TRANSIT MONORAIL &
NEW CAPITAL CITY RAIL TRANSIT MONORAIL

The Authority — Hill International Authority Consultant
Main Contractor: ORASCOM CONSTRUCTION / BOMBARDIER
Designer: SENER / SHAKER CONSULTANCY GROUP

CONTRACTOR
CONSULTANT: ENGINEERING HOUSE FOR CONSULTANCY

| SCALE | SHOP DRAWING | DATE |
|---|---|---|
| AS SHOWN | | 20.11.2024 |

| REV | DATE | BY | DESCRIPTION | CHK | APD |
|---|---|---|---|---|---|
| A | 20-11-24 | E.SH | ISSUE FOR APPROVAL | A.SH | M.M |

DRAWING TITLE:
6TH OF OCTOBER MONORAIL
**SHOP DRAWING FOR STRADDLE BENT 6OL11-22C2**
**STEEL RAFTER.**
Sections Details-06

| Project Code | Rubric | Initiator | Lot | Ref | Number | Revision |
|---|---|---|---|---|---|---|
| 93M | 0407 | ACC | 60L11 | DWG | 90463 | A |

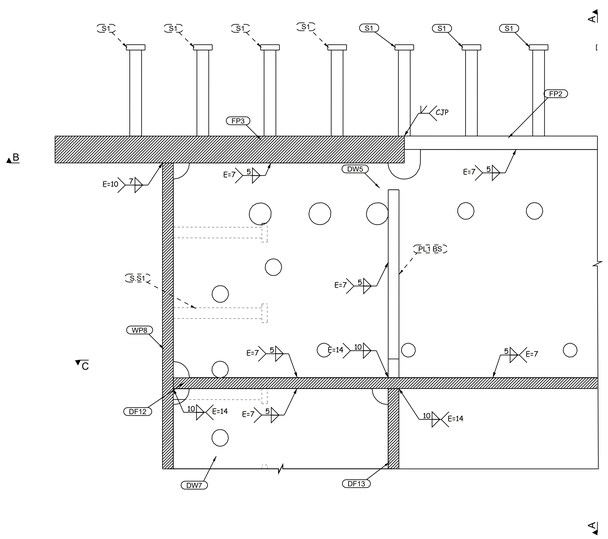


DETAIL-3
SCALE 1:4

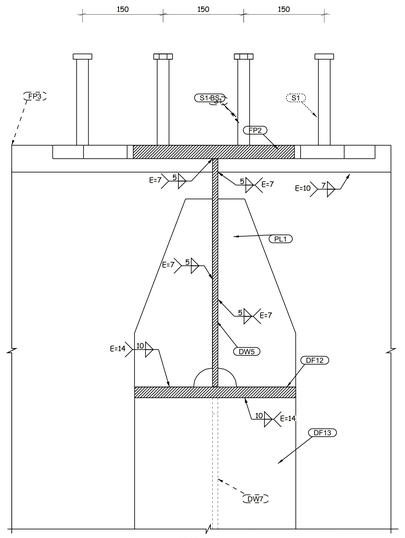


SECTION(A-A)
SCALE 1:4

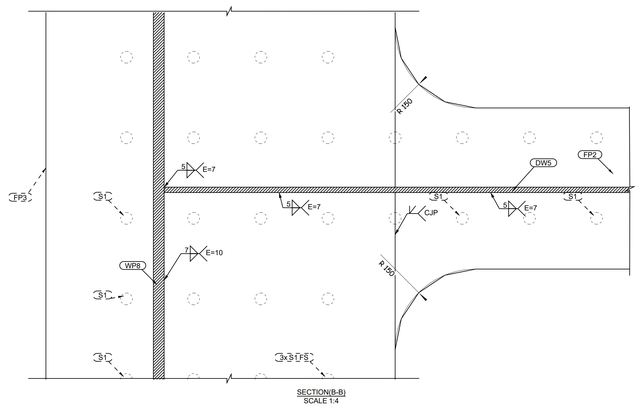


SECTION(B-B)
SCALE 1:4

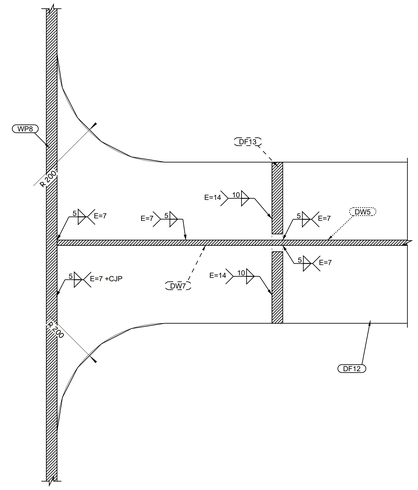


SECTION(C-C)
SCALE 1:4

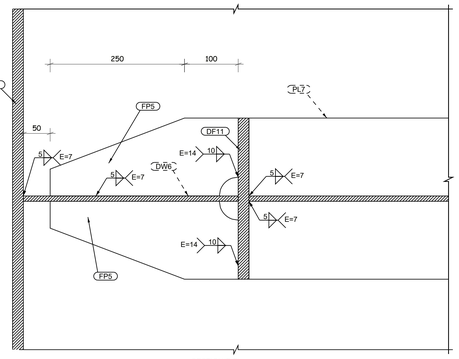


SECTION(E-E)
SCALE 1:4

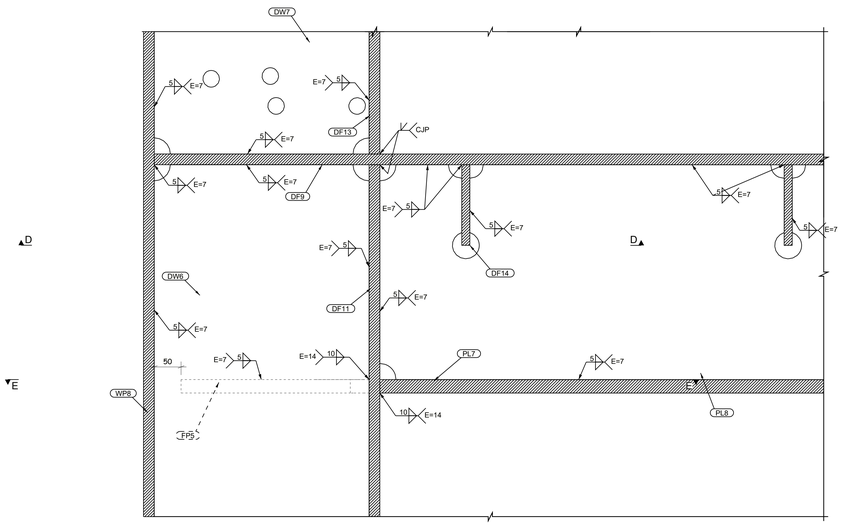


DETAIL-4
SCALE 1:4

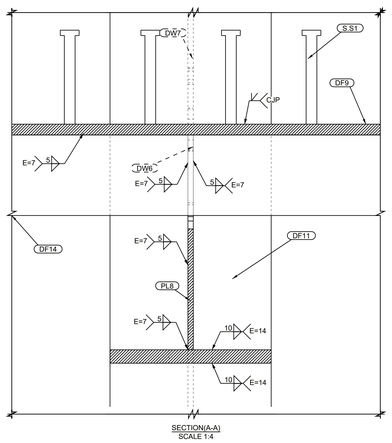


SECTION(A-A)
SCALE 1:4

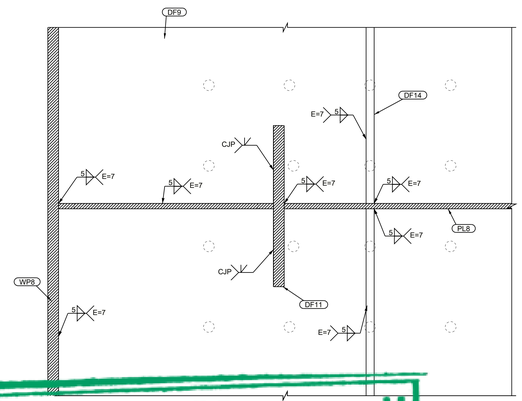


SECTION(D-D)
SCALE 1:4

REVIEWED WITH COMMENT
MONORAILS PROJECT

-Drawing shall be updated according to the comments on the GA drawing.
-Approval is subject to approval of coordination package between multi-disciplines.

1 Nos. Top REQUIRED AS DRAWN MARKED F.G1

6 October: Monorail Engineering Unit
Valid For Construction

## GENERAL NOTES:

1. ALL DIMENSIONS ARE IN MILLIMETERS UNLESS OTHERWISE SPECIFIED.
2. LEVELS ARE IN METERS
3. DESIGN SERVICE LIFE OF 100 YEARS.
4. FLANGES OF TOP AND BOTTOM CHORDS TO BE SUPPLIED WITH IMPROVED THROUGH THICKNESS PROPERTIES Z25 ACCORDING TO EN10164.

REFERENCE DRAWINGS

| | |
|---|---|
| 1 | 93M-BOA-NAT-LOT-26612 |
| 2 | |
| 3 | |
| 4 | |
| 5 | |
| 6 | |
| 7 | |
| 8 | |
| 9 | |
| 10 | |
| 11 | |

6TH OF OCTOBER CITY RAIL TRANSIT MONORAIL &
NEW CAPITAL CITY RAIL TRANSIT MONORAIL

The Authority — Hill International Authority Consultant
ORASCOM CONSTRUCTION — BOMBARDIER — Main Contractor
SENER — SHAKER CONSULTANCY GROUP — Designer

CONTRACTOR
CONSULTANT
ENGINEERING HOUSE FOR CONSULTANCY

| SCALE | SHOP DRAWING | DATE |
|---|---|---|
| AS SHOWN | | 20.11.2024 |

| REV | DATE | BY | DESCRIPTION | CHK | APD |
|---|---|---|---|---|---|
| A | 20-11-24 | E.SH | ISSUE FOR APPROVAL | A.SH | M.M |

DRAWING TITLE:
6TH OF OCTOBER MONORAIL
**SHOP DRAWING FOR STRADDLE BENT 6OL11-22C2**
**STEEL RAFTER.**
Sections Details-07

| Project Code | Rubric | Initiator | Lot | Ref | Number | Revision |
|---|---|---|---|---|---|---|
| 9 3 M | 0 4 0 7 | A C C | 6 0 L 1 1 | D W G | 90464 | A |

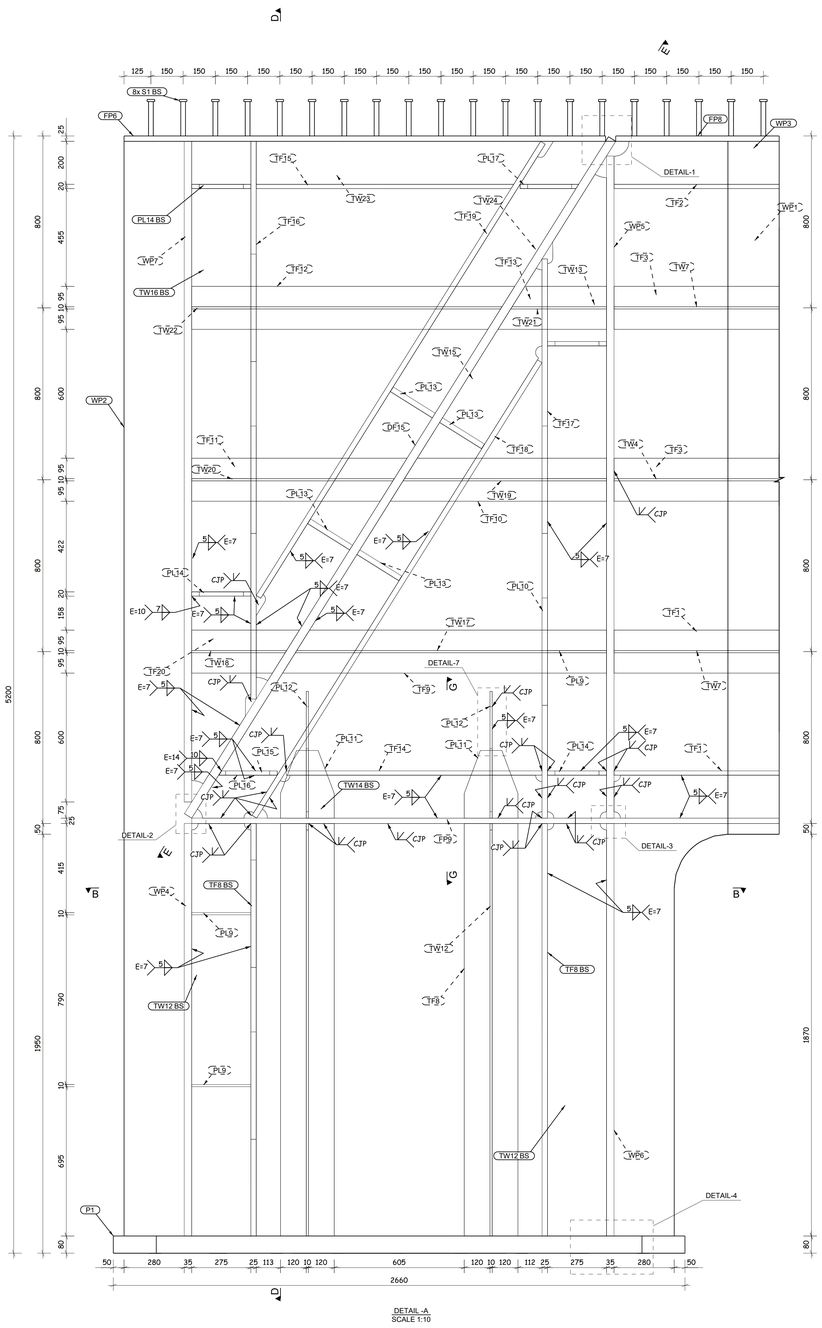


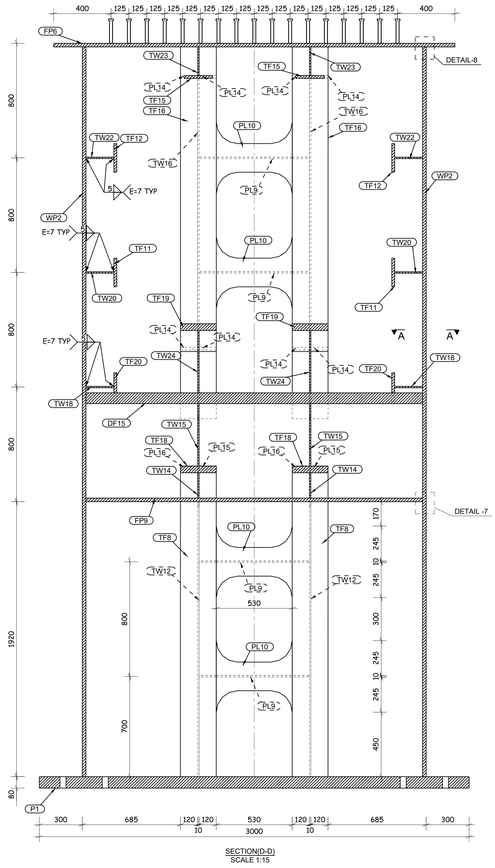


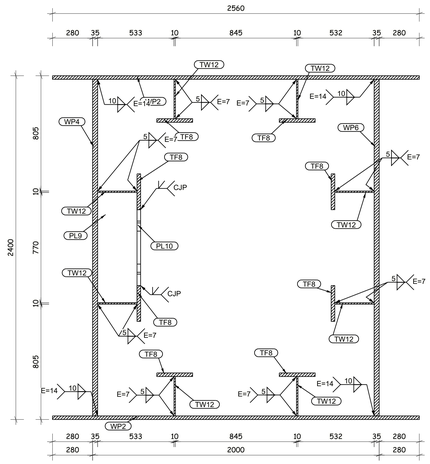


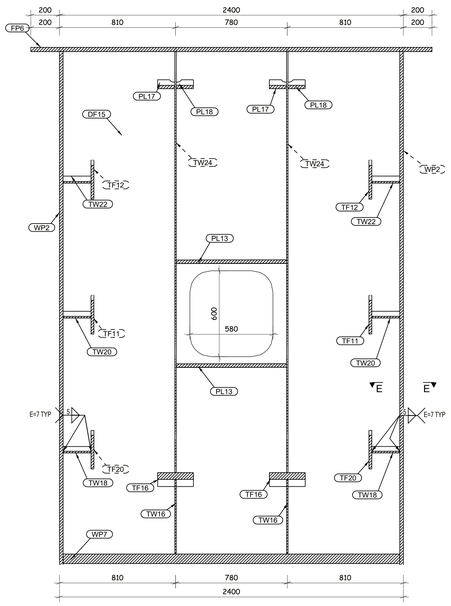


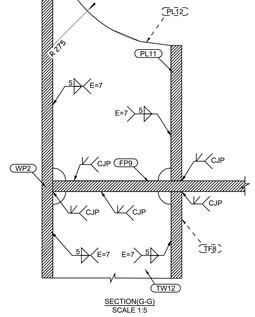


REVIEWED WITH COMMENT
MONORAILS PROJECT

-Drawing shall be updated according to the comments on the GA drawing.
-Approval is subject to approval of coordination package between multi-disciplines.

1 Nos. Top REQUIRED AS DRAWN MARKED F.G1

6 October Monorail
Engineering Unit
Valid For Construction

## GENERAL NOTES:

1. ALL DIMENSIONS ARE IN MILLIMETERS UNLESS OTHERWISE SPECIFIED.
2. LEVELS ARE IN METERS
3. DESIGN SERVICE LIFE OF 100 YEARS.
4. FLANGES OF TOP AND BOTTOM CHORDS TO BE SUPPLIED WITH IMPROVED THROUGH THICKNESS PROPERTIES Z25 ACCORDING TO EN10164.

REFERENCE DRAWINGS

| | |
|---|---|
| 1 | 93M-BOA-NAT-LOT-26612 |
| 2 | |
| 3 | |
| 4 | |
| 5 | |
| 6 | |
| 7 | |
| 8 | |
| 9 | |
| 10 | |
| 11 | |

6TH OF OCTOBER CITY RAIL TRANSIT MONORAIL &
NEW CAPITAL CITY RAIL TRANSIT MONORAIL

The Authority — Hill International Authority Consultant — Main Contractor — Designer

CONTRACTOR
CONSULTANT
ENGINEERING HOUSE FOR CONSULTANCY

SCALE: AS SHOWN | SHOP DRAWING | DATE: 20.11.2024

| REV | DATE | BY | DESCRIPTION | CHK | APD |
|---|---|---|---|---|---|
| A | 20-11-24 | E.SH | ISSUE FOR APPROVAL | A.SH | M.M |

DRAWING TITLE:
6TH OF OCTOBER MONORAIL
**SHOP DRAWING FOR STRADDLE BENT 6OL11-22C2**
**STEEL RAFTER.**
Sections Details-08

| Project Code | Rubric | Initiator | Lot | Ref | Number | Revision |
|---|---|---|---|---|---|---|
| 93M | 0407 | ACC | 60L11 | DWG | 90465 | A |

| ERECTION MARK : | FG2 | | | | QTY : | 56 | NOS |
|---|---|---|---|---|---|---|---|
| POS NO. | QTY PER ASSLY | SECTION | LENGTH | UNIT WEIGHT (Kg) | TOTAL QTY | TOTAL WEIGHT | GRADE |
| R1 | 1 | ROD36 | 2750 | 21 | 56 | 1175.0 | S355J2N |
| N3 | 2 | PD72*18 | 36 | 1 | 112 | 92.0 | S355J2N |
| PL19 | 1 | PL50*140.0 | 140 | 7 | 56 | 407.0 | S355K2N |
| PL20 | 1 | PL140*50.0 | 140 | 7 | 56 | 407.0 | S355K2N |
| | | | | TOTAL WEIGHT : | | 2081.0 | |

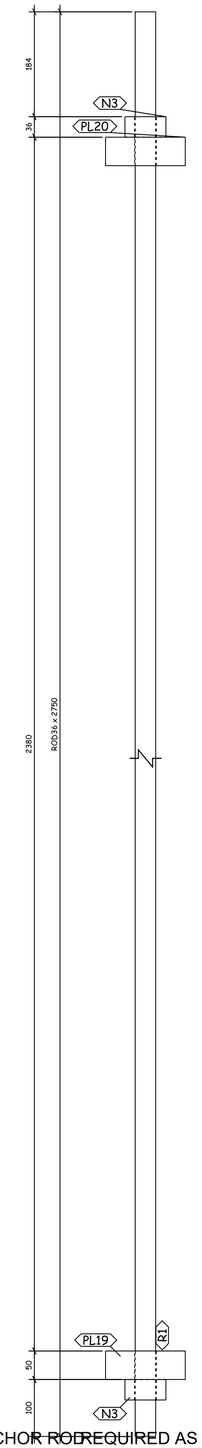


56 Nos. ANCHOR RODREQUIRED AS DRAWN MARKED FG2

REVIEWED WITH COMMENT
MONORAILS PROJECT

-Drawing shall be updated according to the comments on the GA drawing.
-Approval is subject to approval of coordination package between multi-disciplines.

6 October Monorail
Engineering Unit
Valid For Construction

GENERAL NOTES:

1. ALL DIMENSIONS ARE IN MILLIMETERS UNLESS OTHERWISE SPECIFIED.
2. LEVELS ARE IN METERS
3. DESIGN SERVICE LIFE OF 100 YEARS.
4. FLANGES OF TOP AND BOTTOM CHORDS TO BE SUPPLIED WITH IMPROVED THROUGH THICKNESS PROPERTIES Z25 ACCORDING TO EN10164.

REFERENCE DRAWINGS

| | |
|---|---|
| 1 | 93M-BOA-NAT-LOT-26612 |
| 2 | |
| 3 | |
| 4 | |
| 5 | |
| 6 | |
| 7 | |
| 8 | |
| 9 | |
| 10 | |
| 11 | |

6TH OF OCTOBER CITY RAIL TRANSIT MONORAIL &
NEW CAPITAL CITY RAIL TRANSIT MONORAIL

The Authority
Hill International
Authority Consultant

ORASCOM CONSTRUCTION
BOMBARDIER
Main Contractor

SENER
SHAKER CONSULTANTS GROUP
Designer

CONTRACTOR
CONSULTANT:
EHC
ENGINEERING HOUSE FOR CONSULTANCY

| SCALE | SHOP DRAWING | DATE |
|---|---|---|
| AS SHOWN | | 10-11-2024 |

| REV | DATE | BY | DESCRIPTION | CHK | APD |
|---|---|---|---|---|---|
| A | 20-11-24 | E.SH | ISSUE FOR APPROVAL | A.SH | M.M |

DRAWING TITLE:
6TH OF OCTOBER MONORAIL
**SHOP DRAWING FOR STRADDLE BENT 6OL11-22C2 STEEL RAFTER.**
Sections Details-09

| Project Code | Rubric | Initiator | Lot | Ref | Number | Revision |
|---|---|---|---|---|---|---|
| 93M | 0407 | ACC | 60L111 | DWG | 90466 | A |

Tata Structures

| ERECTION MARK : | FG3 | | | | QTY : | 64 | NOS |
|---|---|---|---|---|---|---|---|
| POS NO. | QTY PER ASSLY | SECTION | LENGTH | UNIT WEIGHT (Kg) | TOTAL QTY | TOTAL WEIGHT | GRADE |
| R2 | 1 | ROD36 | 2250 | 17 | 64 | 1099.0 | S355J2N |
| N3 | 2 | PD72*18 | 36 | 1 | 128 | 104.0 | S355J2N |
| PL20 | 1 | PL140*50.0 | 140 | 7 | 64 | 465.0 | S355K2N |
| PL21 | 1 | PL50*140.0 | 140 | 7 | 64 | 465.0 | S355K2N |
| | | | | TOTAL WEIGHT : | | 2133.0 | |

REVIEWED WITH COMMENT
MONORAILS PROJECT

-Drawing shall be updated according to the comments on the GA drawing.
-Approval is subject to approval of coordination package between multi-disciplines.

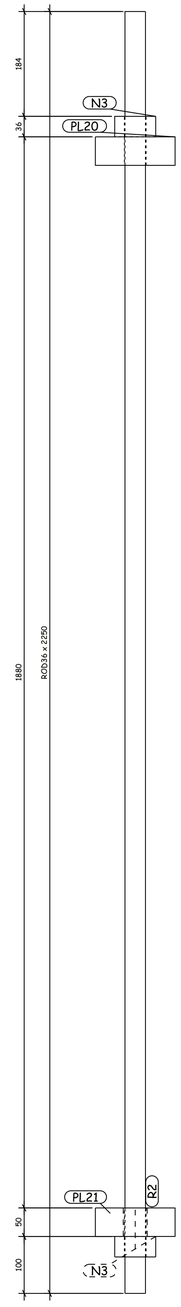


64 Nos. ANCHOR ROD REQUIRED AS DRAWN MARKED FG3

6 October Monorail
Engineering Unit
Valid For Construction

## GENERAL NOTES:

1. ALL DIMENSIONS ARE IN MILLIMETERS UNLESS OTHERWISE SPECIFIED.
2. LEVELS ARE IN METERS
3. DESIGN SERVICE LIFE OF 100 YEARS.
4. FLANGES OF TOP AND BOTTOM CHORDS TO BE SUPPLIED WITH IMPROVED THROUGH THICKNESS PROPERTIES Z25 ACCORDING TO EN10164.

Tata Structures

REFERENCE DRAWINGS

| | |
|---|---|
| 1 | 93M-BOA-NAT-LOT-26612 |
| 2 | |
| 3 | |
| 4 | |
| 5 | |
| 6 | |
| 7 | |
| 8 | |
| 9 | |
| 10 | |
| 11 | |

6TH OF OCTOBER CITY RAIL TRANSIT MONORAIL &
NEW CAPITAL CITY RAIL TRANSIT MONORAIL

The Authority
Hill International
Authority Consultant

ORASCOM CONSTRUCTION
BOMBARDIER
Main Contractor

SENER
SHAKER CONSULTANTS GROUP
Designer

CONTRACTOR
CONSULTANT:
EHC
ENGINEERING HOUSE FOR CONSULTANCY

SCALE: AS SHOWN | SHOP DRAWING | DATE: 10-11-2024

| REV | DATE | BY | DESCRIPTION | CHK | APD |
|---|---|---|---|---|---|
| A | 20-11-24 | E.SH | ISSUE FOR APPROVAL | A.SH | M.M |

DRAWING TITLE:
6TH OF OCTOBER MONORAIL
**SHOP DRAWING FOR STRADDLE BENT 6OL11-22C2 STEEL RAFTER.**
Sections Details-10

| Project Code | Rubric | Initiator | Lot | Ref | Number | Revision |
|---|---|---|---|---|---|---|
| 93M | 0407 | ACC | 60L11 | DWG | 90467 | A |

REVIEWED WITH COMMENT
MONORAILS PROJECT

-Drawing shall be updated according to the comments on the GA drawing.
-Approval is subject to approval of coordination package between multi-disciplines.

All holes are 22mm U.N.O Length & Area & Weight per piece

| Mark | Profile | Grade | QTY | Length | Area | Weight |
|---|---|---|---|---|---|---|
| BR1 | UPN200 | S355J0N | 5 | 2633.1 | 1.74 | 66.6 |

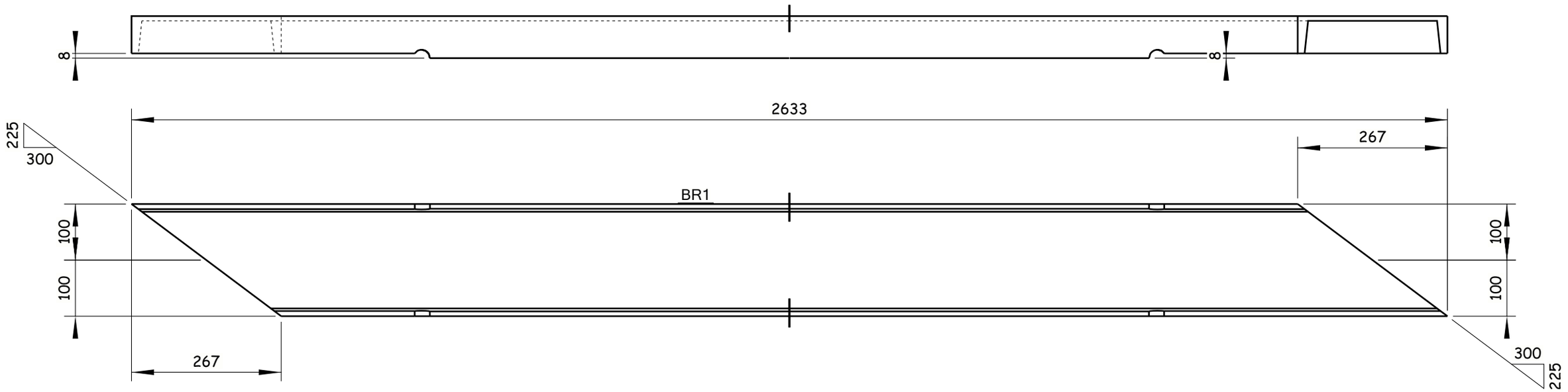


5 Nos. REQUIRED AS DRAWN E.SHBR1

6 October Monorail
Engineering Unit
Valid For Construction

GENERAL NOTES:

1. ALL DIMENSIONS ARE IN MILLIMETERS UNLESS OTHERWISE SPECIFIED.
2. LEVELS ARE IN METERS
3. DESIGN SERVICE LIFE OF 100 YEARS.
4. FLANGES OF TOP AND BOTTOM CHORDS TO BE SUPPLIED WITH IMPROVED THROUGH THICKNESS PROPERTIES Z25 ACCORDING TO EN10164.

REFERENCE DRAWINGS

| | |
|---|---|
| 1 | 93M-BOA-NAT-LOT-26612 |
| 2 | |
| 3 | |
| 4 | |
| 5 | |
| 6 | |
| 7 | |
| 8 | |
| 9 | |
| 10 | |
| 11 | |

6TH OF OCTOBER CITY RAIL TRANSIT MONORAIL &
NEW CAPITAL CITY RAIL TRANSIT MONORAIL

The Authority | Hill International Authority Consultant | Main Contractor | Designer

CONTRACTOR/ CONSULTANT:

ENGINEERING HOUSE FOR CONSULTANCY

SCALE: AS SHOWN | SHOP DRAWING | DATE: 20.11.2024

| REV | DATE | BY | DESCRIPTION | CHK | APD |
|---|---|---|---|---|---|
| A | 20-11-24 | E.SH | ISSUE FOR APPROVAL | A.SH | M.M |

DRAWING TITLE:
6TH OF OCTOBER MONORAIL
**SHOP DRAWING FOR STRADDLE BENT 6OL11-22C2**
**STEEL RAFTER.**
BR1

| Project Code | Rubric | Initiator | Lot | Ref | Number | Revision |
|---|---|---|---|---|---|---|
| 93M | 0407 | ACC | 60L11 | DWG | 90468 | A |

Tekla Structures

REVIEWED WITH COMMENT
MONORAILS PROJECT

-Drawing shall be updated according to the comments on the GA drawing.
-Approval is subject to approval of coordination package between multi-disciplines.

All holes are 22mm U.N.O Length & Area & Weight per piece

| Mark | Profile | Grade | QTY | Length | Area | Weight |
|---|---|---|---|---|---|---|
| BR2 | UPN200 | S355J0N | 5 | 2633.1 | 1.74 | 66.6 |

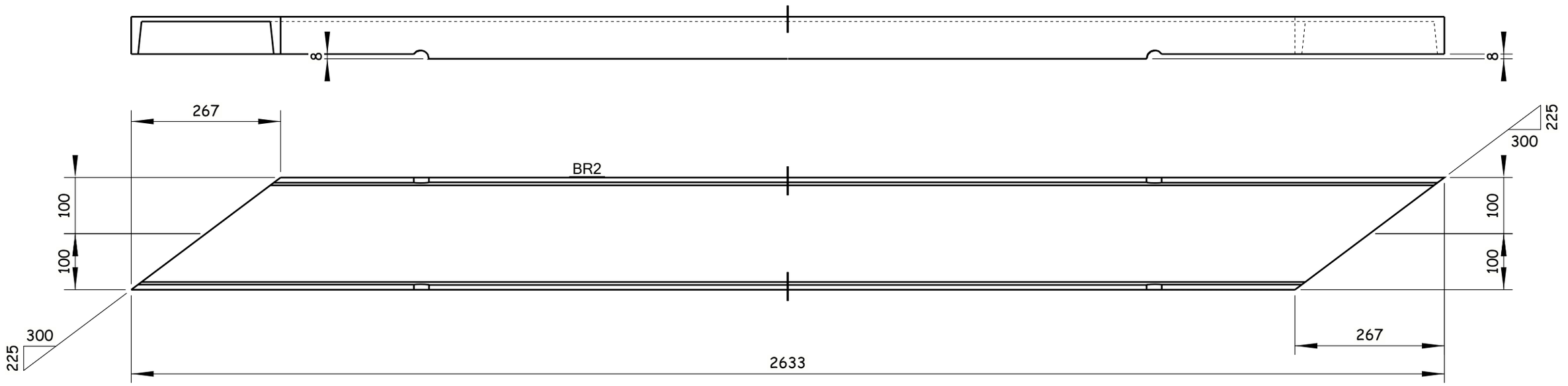


5 Nos. REQUIRED AS DRAWN E.SHBR2

Tekla Structures

GENERAL NOTES:

1. ALL DIMENSIONS ARE IN MILLIMETERS UNLESS OTHERWISE SPECIFIED.
2. LEVELS ARE IN METERS
3. DESIGN SERVICE LIFE OF 100 YEARS.
4. FLANGES OF TOP AND BOTTOM CHORDS TO BE SUPPLIED WITH IMPROVED THROUGH THICKNESS PROPERTIES Z25 ACCORDING TO EN10164.

REFERENCE DRAWINGS

| | |
|---|---|
| 1 | 93M-BOA-NAT-LOT-26612 |
| 2 | |
| 3 | |
| 4 | |
| 5 | |
| 6 | |
| 7 | |
| 8 | |
| 9 | |
| 10 | |
| 11 | |

6TH OF OCTOBER CITY RAIL TRANSIT MONORAIL &
NEW CAPITAL CITY RAIL TRANSIT MONORAIL

The Authority
Hill International
Authority Consultant

ORASCOM CONSTRUCTION
BOMBARDIER
Main Contractor

SENER
SHAKER CONSULTANCY GROUP
Designer

CONTRACTOR:
CONSULTANT:

ENGINEERING HOUSE FOR CONSULTANCY

6 October Monorail
Engineering Unit
Valid For Construction

SCALE: AS SHOWN | SHOP DRAWING | DATE: 20.11.2024

| REV | DATE | BY | DESCRIPTION | CHK | APD |
|---|---|---|---|---|---|
| A | 20-11-24 | E.SH | ISSUE FOR APPROVAL | A.SH | M.M |

DRAWING TITLE:
6TH OF OCTOBER MONORAIL
**SHOP DRAWING FOR STRADDLE BENT 6OL11-22C2**
**STEEL RAFTER.**
BR2

| Project Code | Rubric | Initiator | Lot | Ref | Number | Revision |
|---|---|---|---|---|---|---|
| 93M | 04 07 | ACC | 60L111 | DWG | 90469 | A |

REVIEWED WITH COMMENT
MONORAILS PROJECT

-Drawing shall be updated according to the comments on the GA drawing.
-Approval is subject to approval of coordination package between multi-disciplines.

All holes are 22mm U.N.O Length & Area & Weight per piece

| Mark | Profile | Grade | QTY | Length | Area | Weight |
|---|---|---|---|---|---|---|
| DF1 | PL20*600 | S355J2N | 14 | 2360.0 | 1.58 | 114.5 |

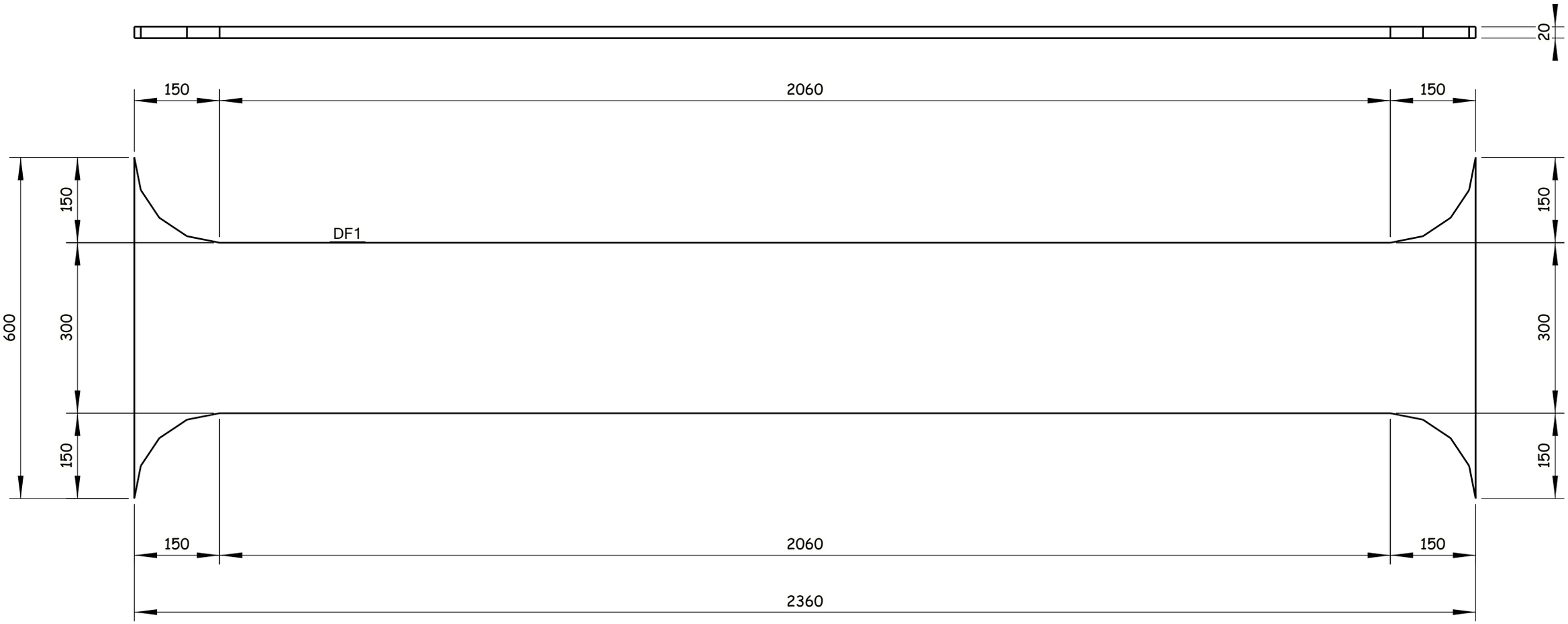


14 Nos. REQUIRED AS DRAWN E.SHDF1

Tekla Structures

GENERAL NOTES:

1. ALL DIMENSIONS ARE IN MILLIMETERS UNLESS OTHERWISE SPECIFIED.
2. LEVELS ARE IN METERS
3. DESIGN SERVICE LIFE OF 100 YEARS.
4. FLANGES OF TOP AND BOTTOM CHORDS TO BE SUPPLIED WITH IMPROVED THROUGH THICKNESS PROPERTIES Z25 ACCORDING TO EN10164.

REFERENCE DRAWINGS

| | |
|---|---|
| 1 | 93M-BOA-NAT-LOT-26612 |
| 2 | |
| 3 | |
| 4 | |
| 5 | |
| 6 | |
| 7 | |
| 8 | |
| 9 | |
| 10 | |
| 11 | |

6TH OF OCTOBER CITY RAIL TRANSIT MONORAIL &
NEW CAPITAL CITY RAIL TRANSIT MONORAIL

The Authority
Hill International
Authority Consultant

ORASCOM CONSTRUCTION
Main Contractor

BOMBARDIER
SENER
SHAKER CONSULTANCY GROUP
Designer

CONTRACTOR / CONSULTANT:
ENGINEERING HOUSE FOR CONSULTANCY

6 October Monorail
Engineering Unit
Valid For Construction

SCALE: AS SHOWN | SHOP DRAWING | DATE: 20.11.2024

DRAWING TITLE:
6TH OF OCTOBER MONORAIL
**SHOP DRAWING FOR STRADDLE BENT 6OL11-22C2 STEEL RAFTER.**
DF1

| REV | DATE | BY | DESCRIPTION | CHK | APD |
|---|---|---|---|---|---|
| A | 20-11-24 | E.SH | ISSUE FOR APPROVAL | A.SH | M.M |

| Project Code | Rubric | Initiator | Lot | Ref | Number | Revision |
|---|---|---|---|---|---|---|
| 93 | M04 | 07 | ACC | 60L11 | DWG | 90470 | A |

REVIEWED WITH COMMENT
MONORAILS PROJECT

-Drawing shall be updated according to the comments on the GA drawing.
-Approval is subject to approval of coordination package between multi-disciplines.

All holes are 22mm U.N.O  Length & Area & Weight per piece

| Mark | Profile | Grade | QTY | Length | Area | Weight |
|---|---|---|---|---|---|---|
| DF2 | FLT20*300 | S355J2N | 14 | 2309.9 | 1.49 | 108.8 |

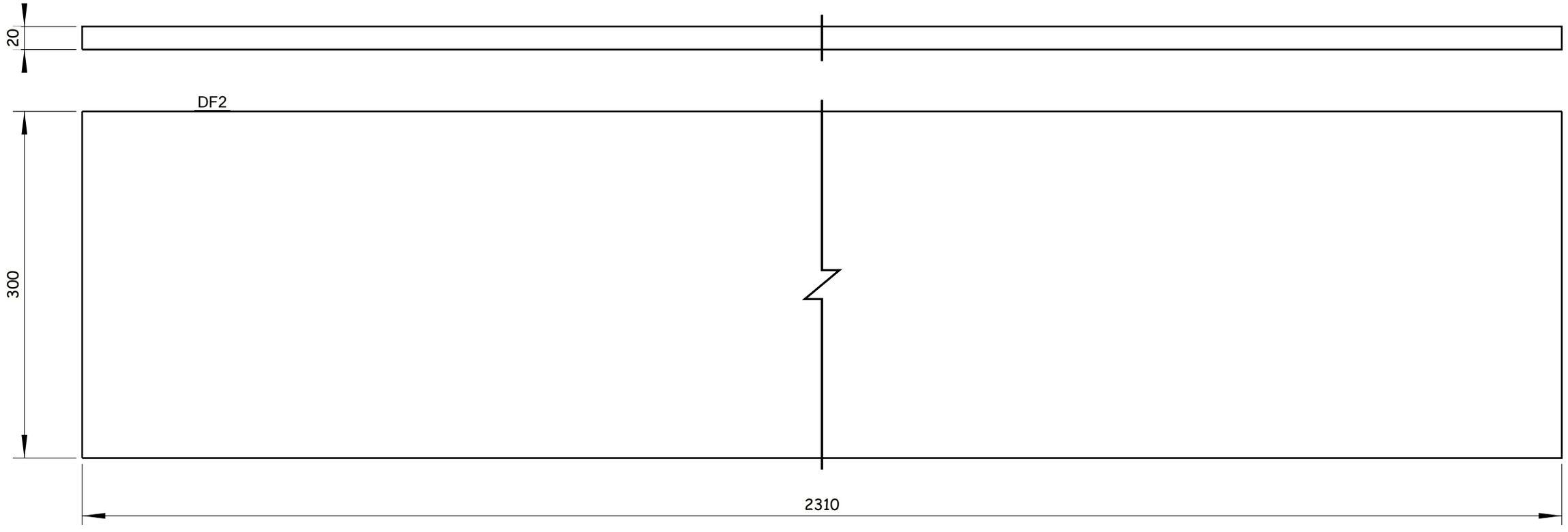


14 Nos. REQUIRED AS DRAWN E.SHDF2

Tekla Structures

GENERAL NOTES:

1. ALL DIMENSIONS ARE IN MILLIMETERS UNLESS OTHERWISE SPECIFIED.
2. LEVELS ARE IN METERS
3. DESIGN SERVICE LIFE OF 100 YEARS.
4. FLANGES OF TOP AND BOTTOM CHORDS TO BE SUPPLIED WITH IMPROVED THROUGH THICKNESS PROPERTIES Z25 ACCORDING TO EN10164.

REFERENCE DRAWINGS

| | |
|---|---|
| 1 | 93M-BOA-NAT-LOT-26612 |
| 2 | |
| 3 | |
| 4 | |
| 5 | |
| 6 | |
| 7 | |
| 8 | |
| 9 | |
| 10 | |
| 11 | |

6TH OF OCTOBER CITY RAIL TRANSIT MONORAIL &
NEW CAPITAL CITY RAIL TRANSIT MONORAIL

The Authority
Hill International
Authority Consultant

Main Contractor

Designer

CONTRACTOR & CONSULTANT:
ENGINEERING HOUSE FOR CONSULTANCY

SCALE: AS SHOWN | CHK'D DRAWING | DATE: 20.11.2024

6 October Monorail Engineering Unit
Valid For Construction

| REV | DATE | BY | DESCRIPTION | CHK | APD |
|---|---|---|---|---|---|
| A | 20-11-24 | E.SH | ISSUE FOR APPROVAL | A.SH | M.M |

DRAWING TITLE:
6TH OF OCTOBER MONORAIL
**SHOP DRAWING FOR STRADDLE BENT 6OL11-22C2**
**STEEL RAFTER.**
DF2

| Project Code | Rubric | Initiator | Lot | Ref | Number | Revision |
|---|---|---|---|---|---|---|
| 93 | M0407 | ACC | 60L11 | DWG | 90471 | A |

REVIEWED WITH COMMENT
MONORAILS PROJECT

-Drawing shall be updated according to the comments on the GA drawing.
-Approval is subject to approval of coordination package between multi-disciplines.

All holes are 22mm U.N.O  Length & Area & Weight per piece

| Mark | Profile | Grade | QTY | Length | Area | Weight |
|---|---|---|---|---|---|---|
| DF3 | PL20*600 | S355J2N | 5 | 2360.0 | 1.59 | 112.3 |

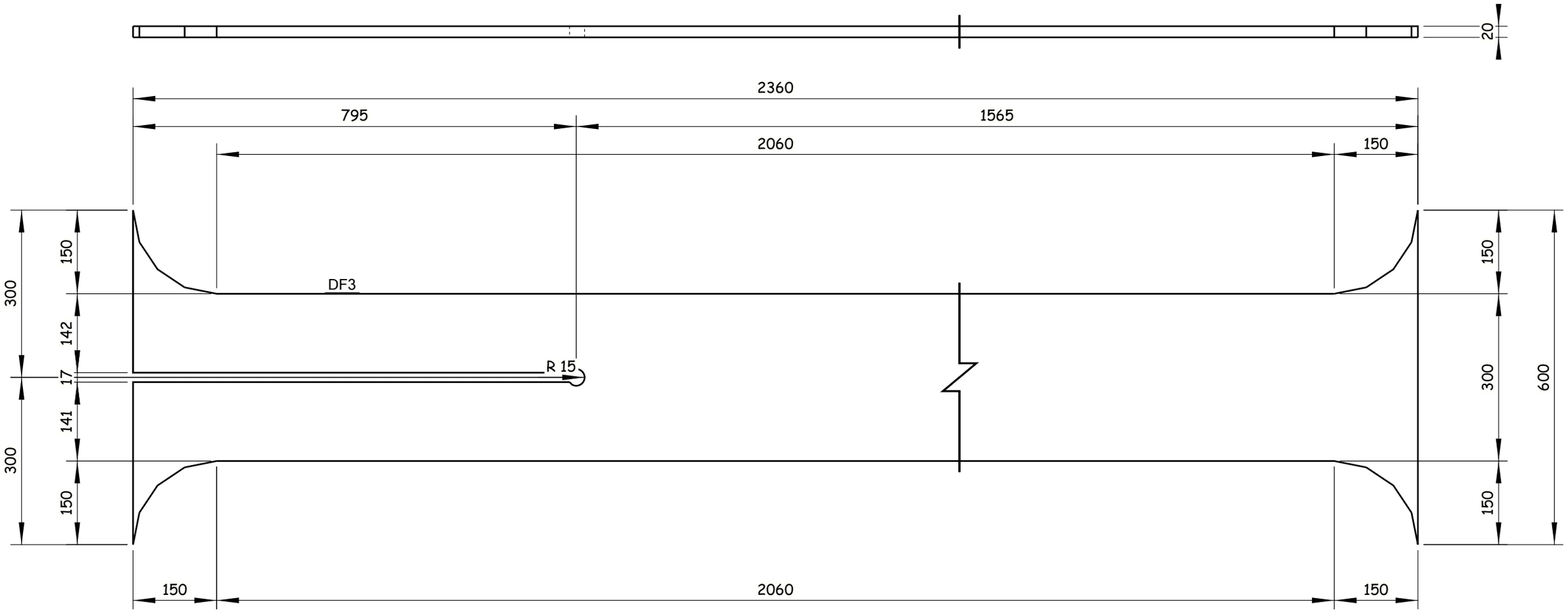


5 Nos. REQUIRED AS DRAWN E.SHDF3

Tekla Structures

GENERAL NOTES:

1. ALL DIMENSIONS ARE IN MILLIMETERS UNLESS OTHERWISE SPECIFIED.
2. LEVELS ARE IN METERS
3. DESIGN SERVICE LIFE OF 100 YEARS.
4. FLANGES OF TOP AND BOTTOM CHORDS TO BE SUPPLIED WITH IMPROVED THROUGH THICKNESS PROPERTIES Z25 ACCORDING TO EN10164.

REFERENCE DRAWINGS

| | |
|---|---|
| 1 | 93M-BOA-NAT-LOT-26612 |
| 2 | |
| 3 | |
| 4 | |
| 5 | |
| 6 | |
| 7 | |
| 8 | |
| 9 | |
| 10 | |
| 11 | |

6TH OF OCTOBER CITY RAIL TRANSIT MONORAIL &
NEW CAPITAL CITY RAIL TRANSIT MONORAIL

The Authority
Hill International
Authority Consultant

ORASCOM CONSTRUCTION
Main Contractor

BOMBARDIER
SENER
SHAKER CONSULTANCY GROUP
Designer

CONTRACTOR
CONSULTANT:
ENGINEERING HOUSE FOR CONSULTANCY

6 October Monorail
Engineering Unit
Valid For Construction

| SCALE | SHOP DRAWING | DATE |
|---|---|---|
| AS SHOWN | | 20.11.2024 |

| REV | DATE | BY | DESCRIPTION | CHK | APD |
|---|---|---|---|---|---|
| A | 20-11-24 | E.SH | ISSUE FOR APPROVAL | A.SH | M.M |

DRAWING TITLE:
6TH OF OCTOBER MONORAIL
SHOP DRAWING FOR STRADDLE BENT 6OL11-22C2
STEEL RAFTER.
DF3

| Project Code | Rubric | Initiator | Lot | Ref | Number | Revision |
|---|---|---|---|---|---|---|
| 93 | M0407 | ACC | 60L11 | DWG | 90472 | A |

REVIEWED WITH COMMENT
MONORAILS PROJECT

-Drawing shall be updated according to the comments on the GA drawing.
-Approval is subject to approval of coordination package between multi-disciplines.

All holes are 22mm U.N.O Length & Area & Weight per piece

| Mark | Profile | Grade | QTY | Length | Area | Weight |
|---|---|---|---|---|---|---|
| DF4 | FLT20*300 | S355J2N | 10 | 2309.9 | 1.49 | 106.9 |

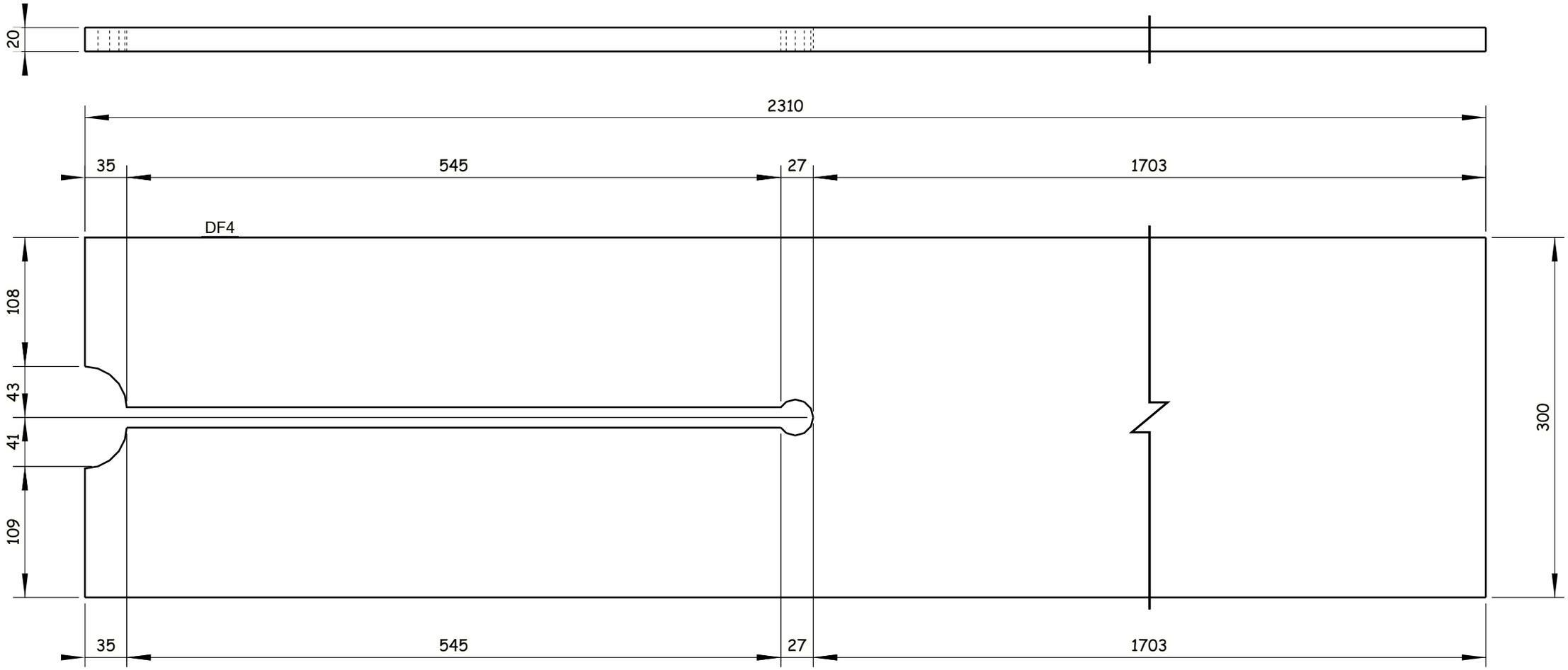


10 Nos. REQUIRED AS DRAWN E.SHDF4

Tekla Structures

GENERAL NOTES:

1. ALL DIMENSIONS ARE IN MILLIMETERS UNLESS OTHERWISE SPECIFIED.
2. LEVELS ARE IN METERS
3. DESIGN SERVICE LIFE OF 100 YEARS.
4. FLANGES OF TOP AND BOTTOM CHORDS TO BE SUPPLIED WITH IMPROVED THROUGH THICKNESS PROPERTIES Z25 ACCORDING TO EN10164.

REFERENCE DRAWINGS

| | |
|---|---|
| 1 | 93M-BOA-NAT-LOT-26612 |
| 2 | |
| 3 | |
| 4 | |
| 5 | |
| 6 | |
| 7 | |
| 8 | |
| 9 | |
| 10 | |
| 11 | |

6TH OF OCTOBER CITY RAIL TRANSIT MONORAIL &
NEW CAPITAL CITY RAIL TRANSIT MONORAIL

The Authority
Hill International
Authority Consultant

ORASCOM CONSTRUCTION
Main Contractor

BOMBARDIER
SENER
SHAKER CONSULTANCY GROUP
Designer

CONTRACTOR & CONSULTANT:
ENGINEERING HOUSE FOR CONSULTANCY

6 October Monorail
Engineering Unit
Valid For Construction

| SCALE | SHOP DRAWING | DATE |
|---|---|---|
| AS SHOWN | | 20.11.2024 |

| REV | DATE | BY | DESCRIPTION | CHK | APD |
|---|---|---|---|---|---|
| A | 20-11-24 | E.SH | ISSUE FOR APPROVAL | A.SH | M.M |

DRAWING TITLE:
6TH OF OCTOBER MONORAIL
**SHOP DRAWING FOR STRADDLE BENT 6OL11-22C2**
**STEEL RAFTER.**
DF4

| Project Code | Rubric | Initiator | Lot | Ref | Number | Revision |
|---|---|---|---|---|---|---|
| 9 3 | M 0 4 0 7 | A C C | 6 0 L 1 1 | D W G | 90473 | A |

| All holes are 22mm U.N.O Length & Area & Weight per piece | | | | | | |
|---|---|---|---|---|---|---|
| DF5 | PL20*2360 | S355J2N | 1 | 3150.0 | 14.51 | 1118.8 |
| Mark | Profile | Grade | QTY | Length | Area | Weight |

REVIEWED WITH COMMENT
MONORAILS PROJECT

-Drawing shall be updated according to the comments on the GA drawing.
-Approval is subject to approval of coordination package between multi-disciplines.

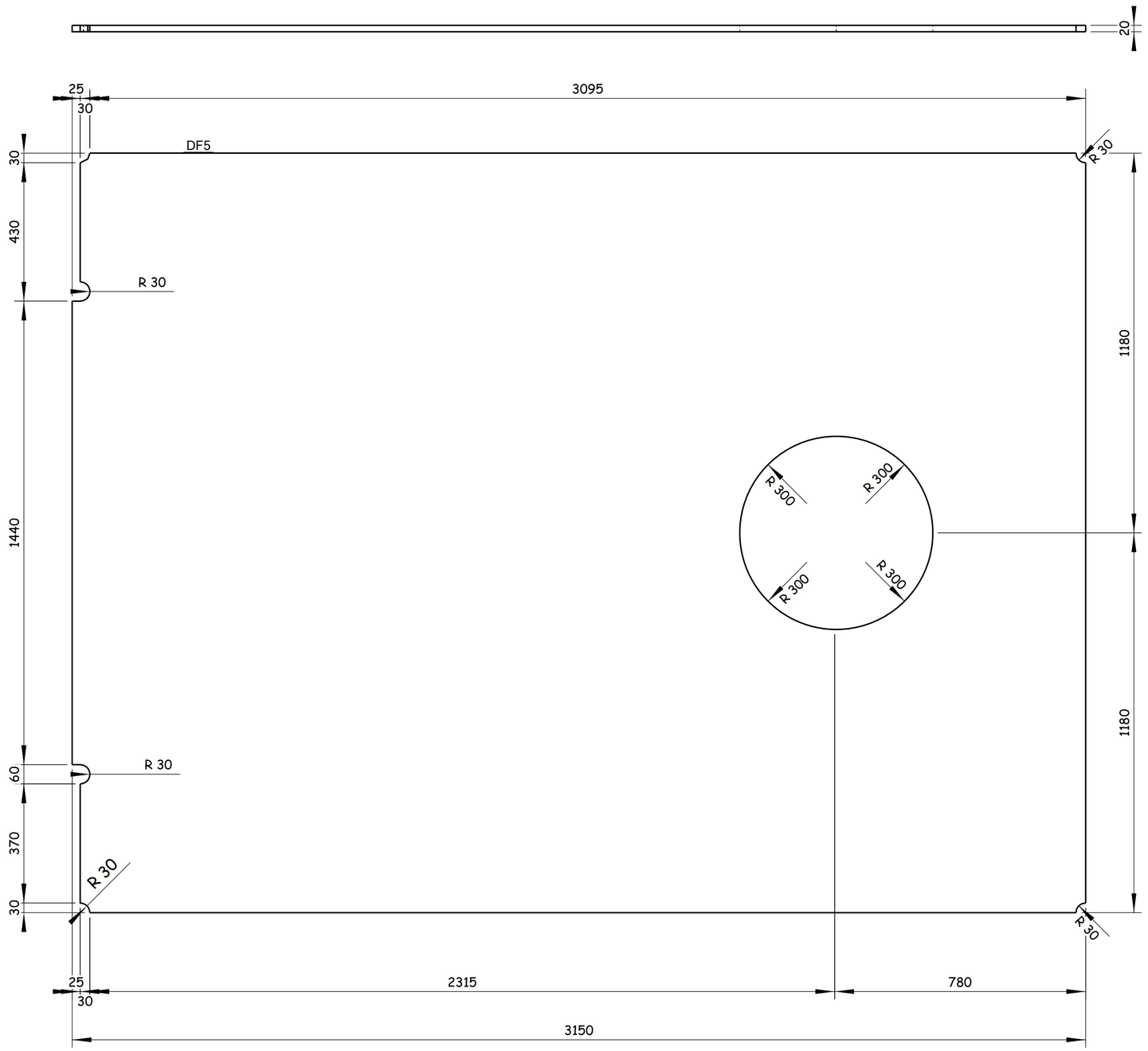


1 Nos. REQUIRED AS DRAWN E.SHDF5

Tekla Structures

GENERAL NOTES:

1. ALL DIMENSIONS ARE IN MILLIMETERS UNLESS OTHERWISE SPECIFIED.
2. LEVELS ARE IN METERS
3. DESIGN SERVICE LIFE OF 100 YEARS.
4. FLANGES OF TOP AND BOTTOM CHORDS TO BE SUPPLIED WITH IMPROVED THROUGH THICKNESS PROPERTIES Z25 ACCORDING TO EN10164.

REFERENCE DRAWINGS

| | |
|---|---|
| 1 | 93M-BOA-NAT-LOT-26612 |
| 2 | |
| 3 | |
| 4 | |
| 5 | |
| 6 | |
| 7 | |
| 8 | |
| 9 | |
| 10 | |
| 11 | |

6TH OF OCTOBER CITY RAIL TRANSIT MONORAIL &
NEW CAPITAL CITY RAIL TRANSIT MONORAIL

The Authority — Hill International — Authority Consultant

Main Contractor

Designer

CONTRACTOR
CONSULTANT

ENGINEERING HOUSE FOR CONSULTANCY

SCALE: AS SHOWN | SHOP DRAWING | DATE: 20.11.2024

| REV | DATE | BY | DESCRIPTION | CHK | APD |
|---|---|---|---|---|---|
| A | 20-11-24 | E.SH | ISSUE FOR APPROVAL | A.SH | M.M |

6 October Monorail
Engineering Unit
Valid For Construction

DRAWING TITLE:
6TH OF OCTOBER MONORAIL
**SHOP DRAWING FOR STRADDLE BENT 6OL11-22C2**
**STEEL RAFTER.**
DF5

| Project Code | Rubric | Initiator | Lot | Ref | Number | Revision |
|---|---|---|---|---|---|---|
| 93 | M0407 | ACC | 60L111 | DWG | 90474 | A |

REVIEWED WITH COMMENT
MONORAILS PROJECT

-Drawing shall be updated according to the comments on the GA drawing.
-Approval is subject to approval of coordination package between multi-disciplines.

All holes are 22mm U.N.O Length & Area & Weight per piece

| Mark | Profile | Grade | QTY | Length | Area | Weight |
|---|---|---|---|---|---|---|
| DF6 | FLT15*150 | S355J2N | 4 | 1919.9 | 0.63 | 33.7 |

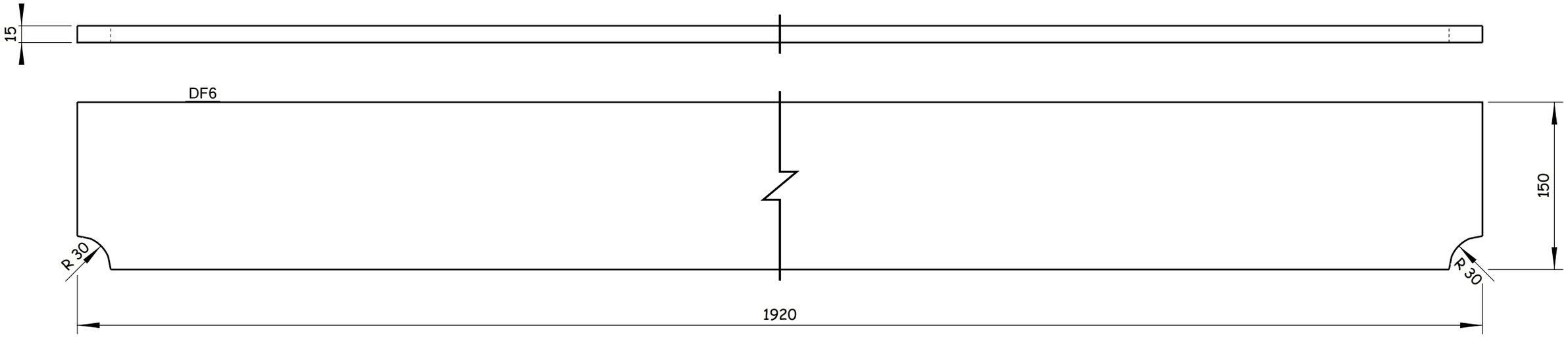


4 Nos. REQUIRED AS DRAWN E.SHDF6

GENERAL NOTES:

1. ALL DIMENSIONS ARE IN MILLIMETERS UNLESS OTHERWISE SPECIFIED.
2. LEVELS ARE IN METERS
3. DESIGN SERVICE LIFE OF 100 YEARS.
4. FLANGES OF TOP AND BOTTOM CHORDS TO BE SUPPLIED WITH IMPROVED THROUGH THICKNESS PROPERTIES Z25 ACCORDING TO EN10164.

REFERENCE DRAWINGS

| | |
|---|---|
| 1 | 93M-BOA-NAT-LOT-26612 |
| 2 | |
| 3 | |
| 4 | |
| 5 | |
| 6 | |
| 7 | |
| 8 | |
| 9 | |
| 10 | |
| 11 | |

6TH OF OCTOBER CITY RAIL TRANSIT MONORAIL &
NEW CAPITAL CITY RAIL TRANSIT MONORAIL

The Authority
Hill International
Authority Consultant

Main Contractor

Designer

6 October Monorail
Engineering Unit
Valid For Construction

CONTRACTOR & CONSULTANT:
ENGINEERING HOUSE FOR CONSULTANCY

SCALE: AS SHOWN
SHD/DRAWING
DATE: 20.11.2024

| REV | DATE | BY | DESCRIPTION | CHK | APD |
|---|---|---|---|---|---|
| A | 20-11-24 | E.SH | ISSUE FOR APPROVAL | A.SH | M.M |

DRAWING TITLE:
6TH OF OCTOBER MONORAIL
**SHOP DRAWING FOR STRADDLE BENT 6OL11-22C2**
**STEEL RAFTER.**
DF6

| Project Code | Rubric | Initiator | Lot | Ref | Number | Revision |
|---|---|---|---|---|---|---|
| 93M | 0407 | ACC | 60L111 | DWG | 90475 | A |

Tekla Structures

| All holes are 22mm U.N.O Length & Area & Weight per piece | | | | | | |
|---|---|---|---|---|---|---|
| DF7 | PL20*2360 | S355J2N | 1 | 3150.0 | 14.51 | 1118.8 |
| Mark | Profile | Grade | QTY | Length | Area | Weight |

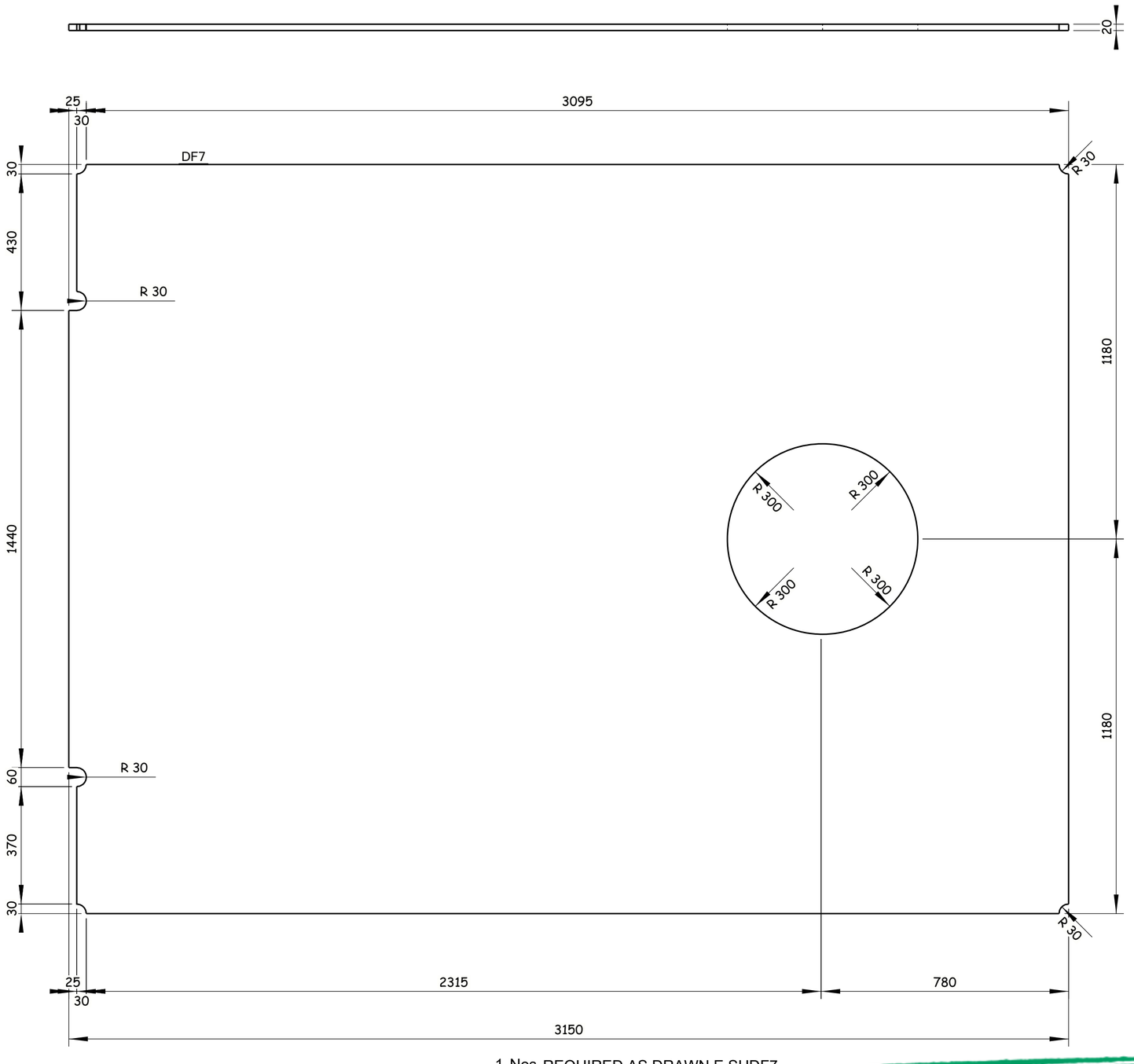


1 Nos. REQUIRED AS DRAWN E.SHDF7

REVIEWED WITH COMMENT MONORAILS PROJECT

-Drawing shall be updated according to the comments on the GA drawing.
-Approval is subject to approval of coordination package between multi-disciplines.

GENERAL NOTES:

1. ALL DIMENSIONS ARE IN MILLIMETERS UNLESS OTHERWISE SPECIFIED.
2. LEVELS ARE IN METERS
3. DESIGN SERVICE LIFE OF 100 YEARS.
4. FLANGES OF TOP AND BOTTOM CHORDS TO BE SUPPLIED WITH IMPROVED THROUGH THICKNESS PROPERTIES Z25 ACCORDING TO EN10164.

REFERENCE DRAWINGS

| | |
|---|---|
| 1 | 93M-BOA-NAT-LOT-26612 |
| 2 | |
| 3 | |
| 4 | |
| 5 | |
| 6 | |
| 7 | |
| 8 | |
| 9 | |
| 10 | |
| 11 | |

6TH OF OCTOBER CITY RAIL TRANSIT MONORAIL & NEW CAPITAL CITY RAIL TRANSIT MONORAIL

وزارة النقل
MINISTRY OF TRANSPORT
The Authority
Hill International
Authority Consultant

ORASCOM CONSTRUCTION
BOMBARDIER
Main Contractor

SENER
SHAKER CONSULTANCY GROUP
Designer

CONTRACTOR CONSULTANT:
ENGINEERING HOUSE FOR CONSULTANCY

6 October Monorail
Engineering Unit
Valid For Construction

| SCALE: AS SHOWN | SHOP DRAWING | DATE: 20.11.2024 |
|---|---|---|

| REV | DATE | BY | DESCRIPTION | CHK | APD |
|---|---|---|---|---|---|
| A | 20-11-24 | E.SH | ISSUE FOR APPROVAL | A.SH | M.M |

DRAWING TITLE:
6TH OF OCTOBER MONORAIL
**SHOP DRAWING FOR STRADDLE BENT 6OL11-22C2**
**STEEL RAFTER.**
DF7

| Project Code | Rubric | Initiator | Lot | Ref | Number | Revision |
|---|---|---|---|---|---|---|
| 93M | 0407 | ACC | 60L11 | DWG | 90476 | A |

Tekla Structures

REVIEWED WITH COMMENT
MONORAILS PROJECT

-Drawing shall be updated according to the comments on the GA drawing.
-Approval is subject to approval of coordination package between multi-disciplines.

All holes are 22mm U.N.O Length & Area & Weight per piece

| Mark | Profile | Grade | QTY | Length | Area | Weight |
|---|---|---|---|---|---|---|
| DF8 | PL20*1565.1 | S355J2N | 2 | 2360.0 | 7.02 | 535.7 |

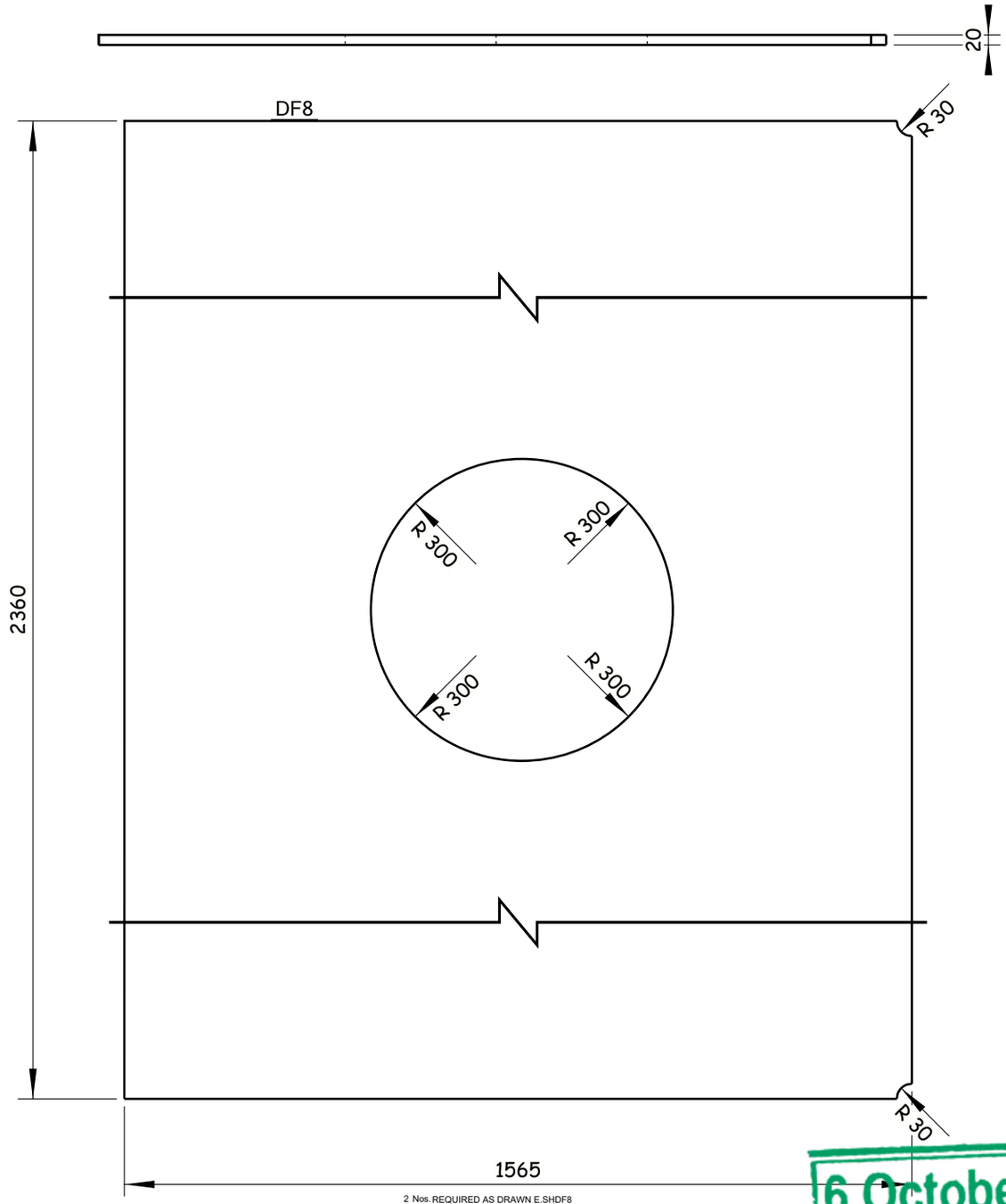


2 Nos. REQUIRED AS DRAWN E.SHDF8

Tekla Structures

GENERAL NOTES:

1. ALL DIMENSIONS ARE IN MILLIMETERS UNLESS OTHERWISE SPECIFIED.
2. LEVELS ARE IN METERS
3. DESIGN SERVICE LIFE OF 100 YEARS.
4. FLANGES OF TOP AND BOTTOM CHORDS TO BE SUPPLIED WITH IMPROVED THROUGH THICKNESS PROPERTIES Z25 ACCORDING TO EN10164.

REFERENCE DRAWINGS

| | |
|---|---|
| 1 | 93M-BOA-NAT-LOT-26612 |
| 2 | |
| 3 | |
| 4 | |
| 5 | |
| 6 | |
| 7 | |
| 8 | |
| 9 | |
| 10 | |
| 11 | |

6TH OF OCTOBER CITY RAIL TRANSIT MONORAIL &
NEW CAPITAL CITY RAIL TRANSIT MONORAIL

The Authority
Hill International
Authority Consultant

Main Contractor

Designer

CONTRACTOR & CONSULTANT:
ENGINEERING HOUSE FOR CONSULTANCY

SCALE: AS SHOWN
SHD DRAWING
DATE: 20.11.2024

| REV | DATE | BY | DESCRIPTION | CHK | APD |
|---|---|---|---|---|---|
| A | 20-11-24 | E.SH | ISSUE FOR APPROVAL | A.SH | M.M |

6 October Monorail
Engineering Unit
Valid For Construction

DRAWING TITLE:
6TH OF OCTOBER MONORAIL
**SHOP DRAWING FOR STRADDLE BENT 6OL11-22C2**
**STEEL RAFTER.**
DF8

| Project Code | Rubric | Initiator | Lot | Ref | Number | Revision |
|---|---|---|---|---|---|---|
| 93M | 04 | 07 | ACC | 60L11 | DWG | 90477 | A |

REVIEWED WITH COMMENT
MONORAILS PROJECT

-Drawing shall be updated according to the comments on the GA drawing.
-Approval is subject to approval of coordination package between multi-disciplines.

All holes are 22mm U.N.O Length & Area & Weight per piece

| Mark | Profile | Grade | QTY | Length | Area | Weight |
|---|---|---|---|---|---|---|
| DF9 | PL20*2360 | S355J2N | 1 | 7294.0 | 34.81 | 2702.6 |

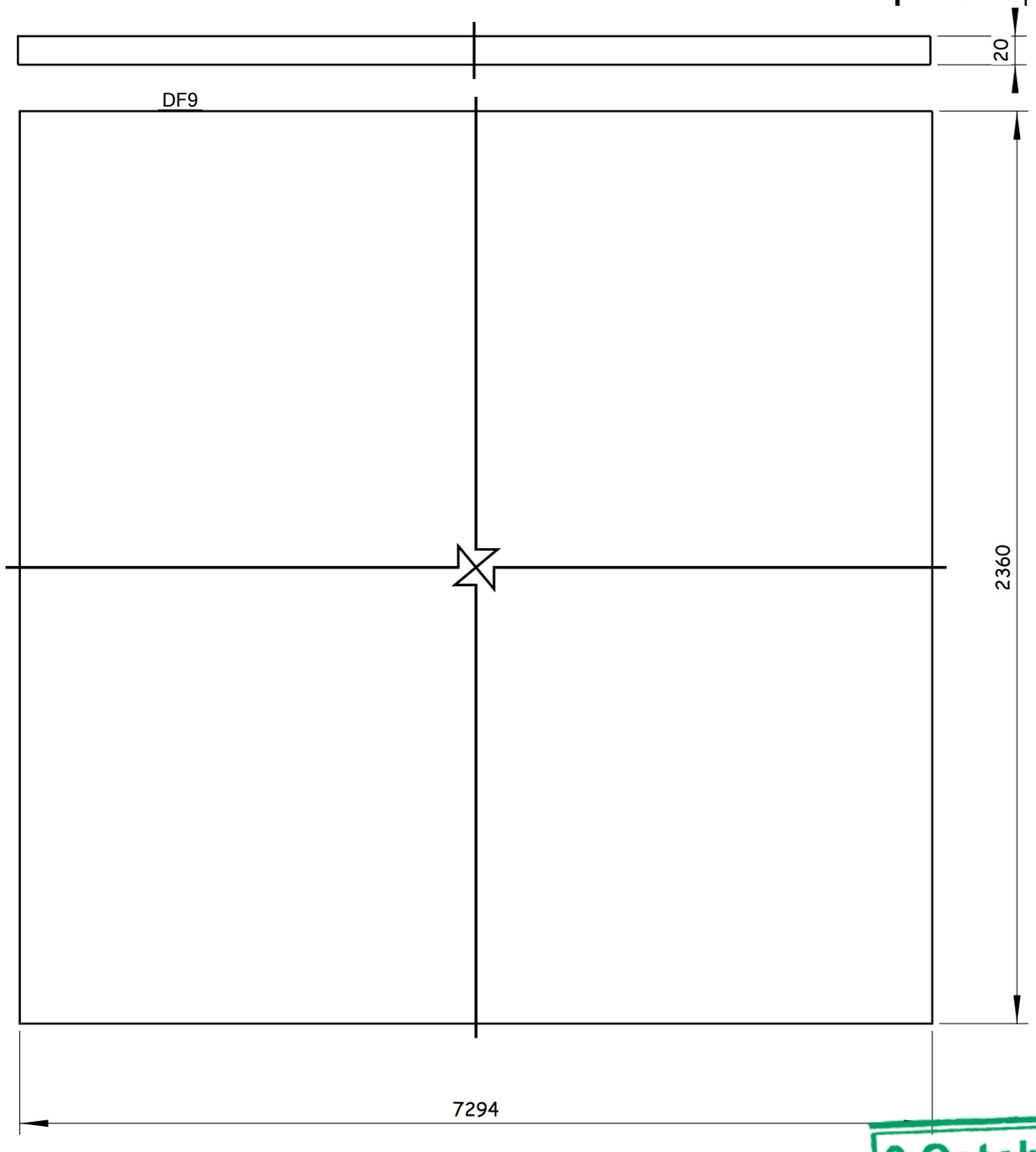


1 Nos. REQUIRED AS DRAWN E.SHDF9

6 October Monorail
Engineering Unit
Valid For Construction

GENERAL NOTES:

1. ALL DIMENSIONS ARE IN MILLIMETERS UNLESS OTHERWISE SPECIFIED.
2. LEVELS ARE IN METERS
3. DESIGN SERVICE LIFE OF 100 YEARS.
4. FLANGES OF TOP AND BOTTOM CHORDS TO BE SUPPLIED WITH IMPROVED THROUGH THICKNESS PROPERTIES Z25 ACCORDING TO EN10164.

REFERENCE DRAWINGS

| | |
|---|---|
| 1 | 93M-BOA-NAT-LOT-26612 |
| 2 | |
| 3 | |
| 4 | |
| 5 | |
| 6 | |
| 7 | |
| 8 | |
| 9 | |
| 10 | |
| 11 | |

6TH OF OCTOBER CITY RAIL TRANSIT MONORAIL &
NEW CAPITAL CITY RAIL TRANSIT MONORAIL

The Authority
Hill International
Authority Consultant

Main Contractor

Designer

CONTRACTOR CONSULTANT:
ENGINEERING HOUSE FOR CONSULTANCY

SCALE: AS SHOWN | SHD DRAWING | DATE: 20.11.2024

| REV | DATE | BY | DESCRIPTION | CHK | APD |
|---|---|---|---|---|---|
| A | 20-11-24 | E.SH | ISSUE FOR APPROVAL | A.SH | M.M |

DRAWING TITLE:
6TH OF OCTOBER MONORAIL
**SHOP DRAWING FOR STRADDLE BENT 6OL11-22C2**
**STEEL RAFTER.**
DF9

| Project Code | Rubric | Initiator | Lot | Ref | Number | Revision |
|---|---|---|---|---|---|---|
| 93 | M0407 | ACC | 60L11 | DWG | 90478 | A |

Tekla Structures

| All holes are 22mm U.N.O Length & Area & Weight per piece | | | | | | |
|---|---|---|---|---|---|---|
| DF10 | PL20*1565.2 | S355J2N | 2 | 2360.0 | 7.53 | 566.2 |
| Mark | Profile | Grade | QTY | Length | Area | Weight |

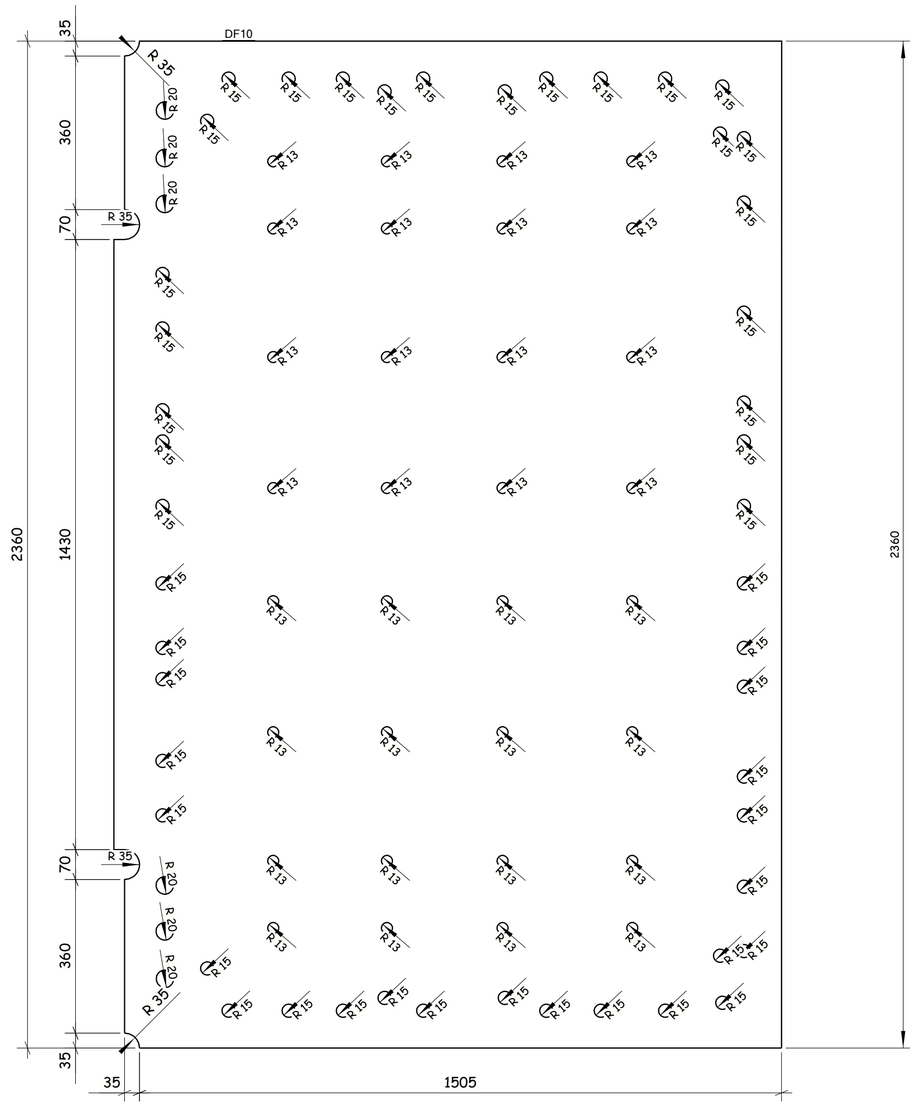


REVIEWED WITH COMMENT
MONORAILS PROJECT

-Drawing shall be updated according to the comments on the GA drawing.
-Approval is subject to approval of coordination package between multi-disciplines.

2 Nos. REQUIRED AS DRAWN E.SHDF10

## GENERAL NOTES:

1. ALL DIMENSIONS ARE IN MILLIMETERS UNLESS OTHERWISE SPECIFIED.
2. LEVELS ARE IN METERS
3. DESIGN SERVICE LIFE OF 100 YEARS.
4. FLANGES OF TOP AND BOTTOM CHORDS TO BE SUPPLIED WITH IMPROVED THROUGH THICKNESS PROPERTIES Z25 ACCORDING TO EN10164.

REFERENCE DRAWINGS

| | |
|---|---|
| 1 | 93M-BOA-NAT-LOT-26612 |
| 2 | |
| 3 | |
| 4 | |
| 5 | |
| 6 | |
| 7 | |
| 8 | |
| 9 | |
| 10 | |
| 11 | |

6TH OF OCTOBER CITY RAIL TRANSIT MONORAIL &
NEW CAPITAL CITY RAIL TRANSIT MONORAIL

The Authority — Authority Consultant: Hill International — Main Contractor: ORASCOM CONSTRUCTION — BOMBARDIER — Designer: SENER, SHAKER CONSULTANCY GROUP

CONTRACTOR
CONSULTANT: ENGINEERING HOUSE FOR CONSULTANCY

| SCALE | SHOP DRAWING NO. | DATE |
|---|---|---|
| AS SHOWN | | 20.11.2024 |

| REV | DATE | BY | DESCRIPTION | CHK | APD |
|---|---|---|---|---|---|
| A | 20-11-24 | E.SH | ISSUE FOR APPROVAL | A.SH | M.M |

6 October Monorail Engineering Unit
Valid For Construction

DRAWING TITLE:
6TH OF OCTOBER MONORAIL
**SHOP DRAWING FOR STRADDLE BENT 6OL11-22C2**
**STEEL RAFTER.**
DF10

| Project Code | Rubric | Initiator | Lot | Ref | Number | Revision |
|---|---|---|---|---|---|---|
| 93 | M04 | 07 | ACC | 60 | L11 | DWG | 90479 | A |

Tekla Structures

REVIEWED WITH COMMENT
MONORAILS PROJECT

-Drawing shall be updated according to the comments on the GA drawing.
-Approval is subject to approval of coordination package between multi-disciplines.

All holes are 22mm U.N.O  Length & Area & Weight per piece

| Mark | Profile | Grade | QTY | Length | Area | Weight |
|---|---|---|---|---|---|---|
| DF11 | FLT20*300 | S355J2N | 2 | 1144.8 | 0.74 | 53.9 |

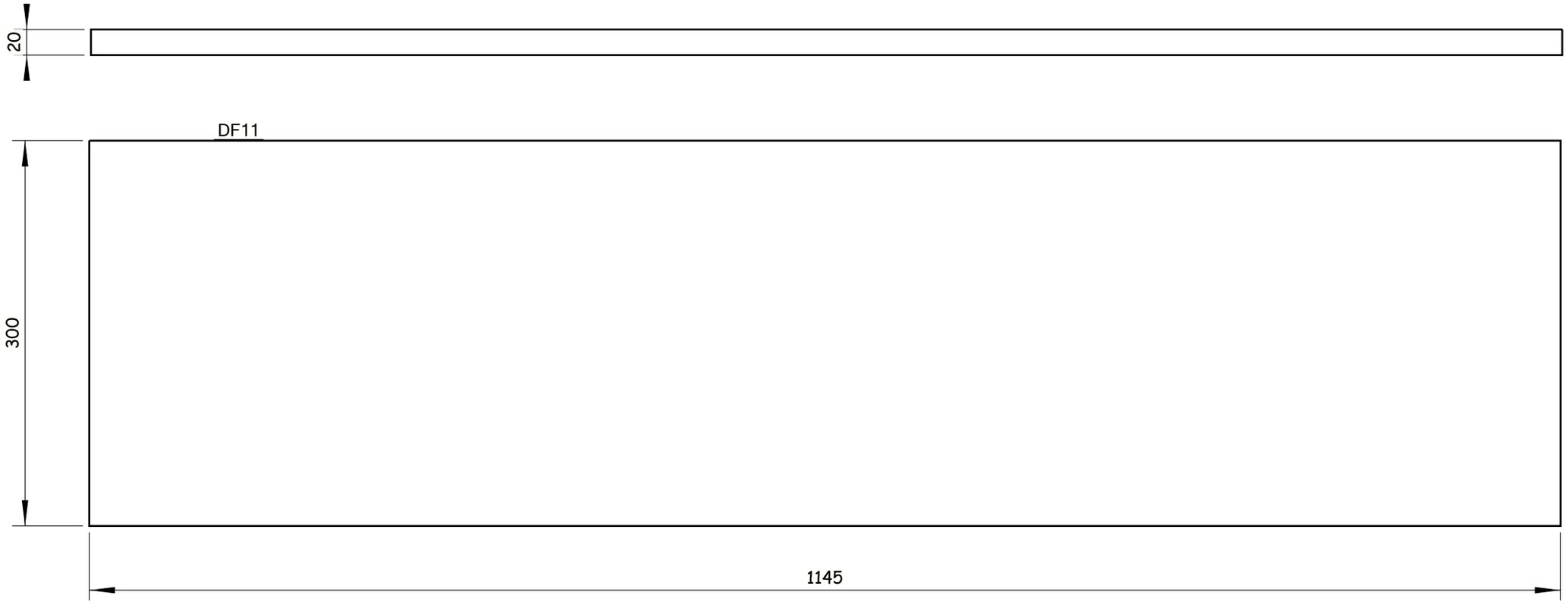


2 Nos. REQUIRED AS DRAWN E.SHDF11

Tekla Structures

GENERAL NOTES:

1. ALL DIMENSIONS ARE IN MILLIMETERS UNLESS OTHERWISE SPECIFIED.
2. LEVELS ARE IN METERS
3. DESIGN SERVICE LIFE OF 100 YEARS.
4. FLANGES OF TOP AND BOTTOM CHORDS TO BE SUPPLIED WITH IMPROVED THROUGH THICKNESS PROPERTIES Z25 ACCORDING TO EN10164.

REFERENCE DRAWINGS

| | |
|---|---|
| 1 | 93M-BOA-NAT-LOT-26612 |
| 2 | |
| 3 | |
| 4 | |
| 5 | |
| 6 | |
| 7 | |
| 8 | |
| 9 | |
| 10 | |
| 11 | |

6TH OF OCTOBER CITY RAIL TRANSIT MONORAIL &
NEW CAPITAL CITY RAIL TRANSIT MONORAIL

The Authority
Hill International
Authority Consultant

ORASCOM CONSTRUCTION
BOMBARDIER
Main Contractor

SENER
SHAKER CONSULTANCY GROUP
Designer

CONTRACTOR & CONSULTANT:
ENGINEERING HOUSE FOR CONSULTANCY

SCALE: AS SHOWN | CHK'D DRAWING | DATE: 20.11.2024

| REV | DATE | BY | DESCRIPTION | CHK | APD |
|---|---|---|---|---|---|
| A | 20-11-24 | E.SH | ISSUE FOR APPROVAL | A.SH | M.M |

6 October Monorail
Engineering Unit
Valid For Construction

DRAWING TITLE:
6TH OF OCTOBER MONORAIL
**SHOP DRAWING FOR STRADDLE BENT 6OL11-22C2**
**STEEL RAFTER.**
DF11

| Project Code | Rubric | Initiator | Lot | Ref | Number | Revision |
|---|---|---|---|---|---|---|
| 93 | M04 | 07 | ACC | 60L11 | DWG | 90480 | A |

REVIEWED WITH COMMENT
MONORAILS PROJECT

-Drawing shall be updated according to the comments on the GA drawing.
-Approval is subject to approval of coordination package between multi-disciplines.

All holes are 22mm U.N.O Length & Area & Weight per piece

| Mark | Profile | Grade | QTY | Length | Area | Weight |
|---|---|---|---|---|---|---|
| DF12 | PL20*700 | S355J2N | 2 | 2360.0 | 1.62 | 116.9 |

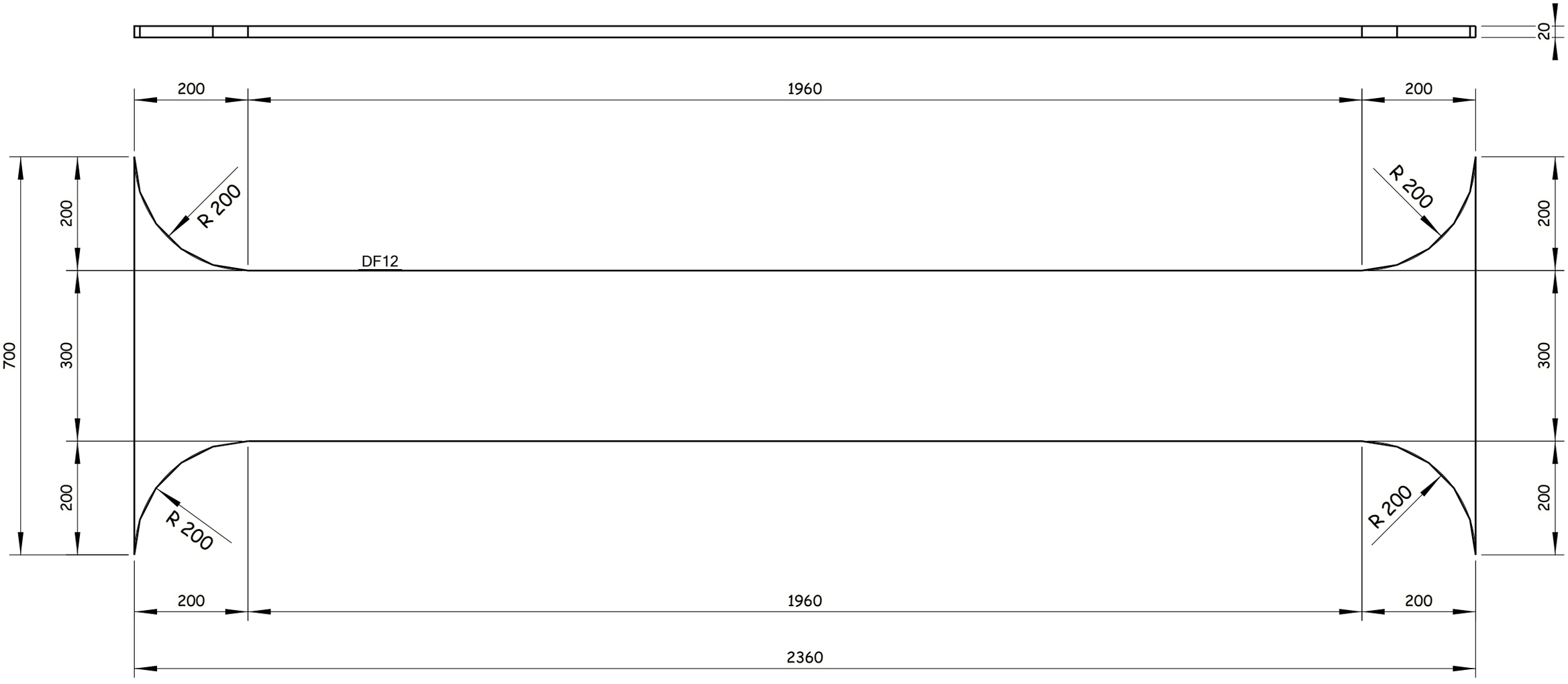


2 Nos. REQUIRED AS DRAWN E.SHDF12

6 October Monorail
Engineering Unit
Valid For Construction

Tekla Structures

GENERAL NOTES:

1. ALL DIMENSIONS ARE IN MILLIMETERS UNLESS OTHERWISE SPECIFIED.
2. LEVELS ARE IN METERS
3. DESIGN SERVICE LIFE OF 100 YEARS.
4. FLANGES OF TOP AND BOTTOM CHORDS TO BE SUPPLIED WITH IMPROVED THROUGH THICKNESS PROPERTIES Z25 ACCORDING TO EN10164.

REFERENCE DRAWINGS

| | |
|---|---|
| 1 | 93M-BOA-NAT-LOT-26612 |
| 2 | |
| 3 | |
| 4 | |
| 5 | |
| 6 | |
| 7 | |
| 8 | |
| 9 | |
| 10 | |
| 11 | |

6TH OF OCTOBER CITY RAIL TRANSIT MONORAIL &
NEW CAPITAL CITY RAIL TRANSIT MONORAIL

The Authority
Hill International
Authority Consultant

Main Contractor

Designer

CONTRACTOR / CONSULTANT:
ENGINEERING HOUSE FOR CONSULTANCY

SCALE: AS SHOWN | CHK'D DRAWING | DATE: 20.11.2024

| REV | DATE | BY | DESCRIPTION | CHK | APD |
|---|---|---|---|---|---|
| A | 20-11-24 | E.SH | ISSUE FOR APPROVAL | A.SH | M.M |

DRAWING TITLE:
6TH OF OCTOBER MONORAIL
**SHOP DRAWING FOR STRADDLE BENT 6OL11-22C2**
**STEEL RAFTER.**
DF12

| Project Code | Rubric | Initiator | Lot | Ref | Number | Revision |
|---|---|---|---|---|---|---|
| 93M | 04 07 | ACC | 60 L11 | DWG | 90481 | A |

REVIEWED WITH COMMENT
MONORAILS PROJECT

-Drawing shall be updated according to the comments on the GA drawing.
-Approval is subject to approval of coordination package between multi-disciplines.

All holes are 22mm U.N.O  Length & Area & Weight per piece

| Mark | Profile | Grade | QTY | Length | Area | Weight |
|---|---|---|---|---|---|---|
| DF13 | FLT20*300 | S355J2N | 2 | 1120.1 | 0.73 | 52.8 |

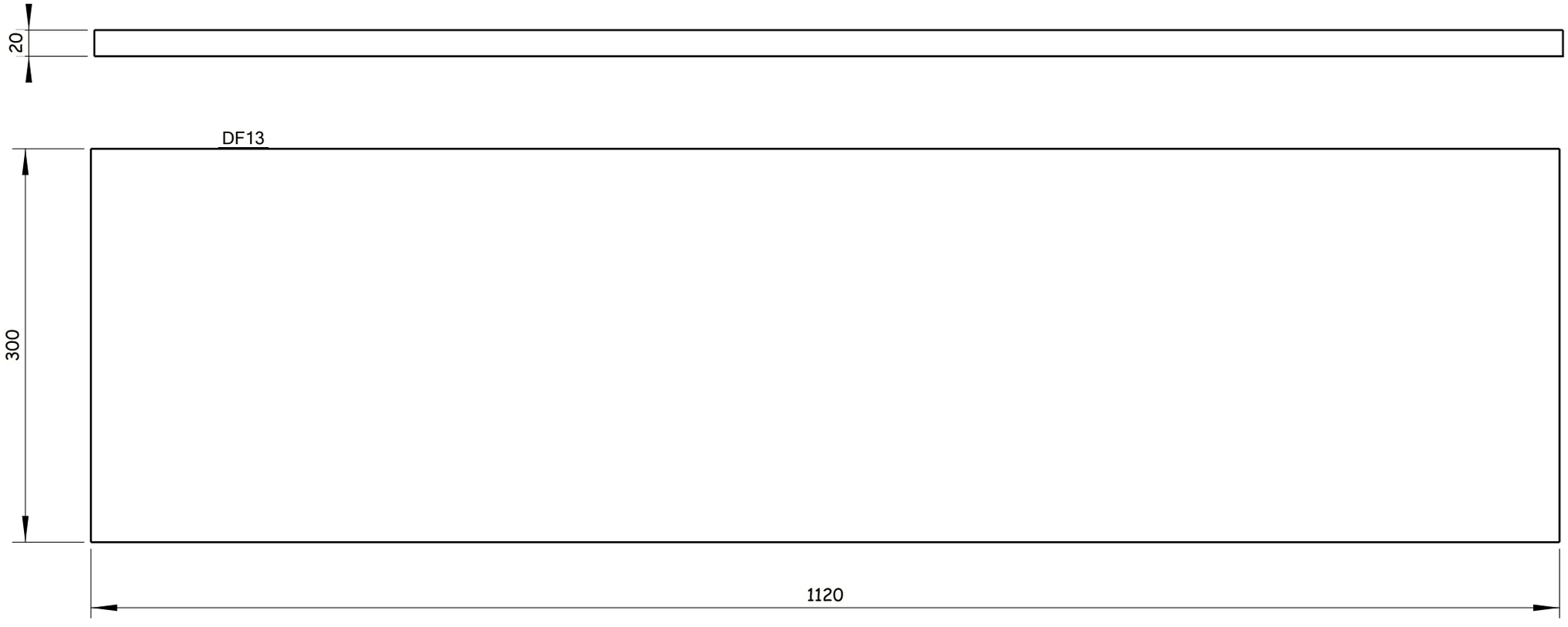


2 Nos. REQUIRED AS DRAWN E.SHDF13

Tekla Structures

GENERAL NOTES:

1. ALL DIMENSIONS ARE IN MILLIMETERS UNLESS OTHERWISE SPECIFIED.
2. LEVELS ARE IN METERS
3. DESIGN SERVICE LIFE OF 100 YEARS.
4. FLANGES OF TOP AND BOTTOM CHORDS TO BE SUPPLIED WITH IMPROVED THROUGH THICKNESS PROPERTIES Z25 ACCORDING TO EN10164.

REFERENCE DRAWINGS

| | |
|---|---|
| 1 | 93M-BOA-NAT-LOT-26612 |
| 2 | |
| 3 | |
| 4 | |
| 5 | |
| 6 | |
| 7 | |
| 8 | |
| 9 | |
| 10 | |
| 11 | |

6TH OF OCTOBER CITY RAIL TRANSIT MONORAIL &
NEW CAPITAL CITY RAIL TRANSIT MONORAIL

The Authority
Hill International
Authority Consultant

ORASCOM CONSTRUCTION
Main Contractor

SENER
SHAKER CONSULTANCY GROUP
Designer

CONTRACTOR / CONSULTANT:
ENGINEERING HOUSE FOR CONSULTANCY

SCALE: AS SHOWN | CHK'D DRAWING | DATE: 20.11.2024

| REV | DATE | BY | DESCRIPTION | CHK | APD |
|---|---|---|---|---|---|
| A | 20-11-24 | E.SH | ISSUE FOR APPROVAL | A.SH | M.M |

6 October Monorail
Engineering Unit
Valid For Construction

DRAWING TITLE:
6TH OF OCTOBER MONORAIL
**SHOP DRAWING FOR STRADDLE BENT 6OL11-22C2**
**STEEL RAFTER.**
DF13

| Project Code | Rubric | Initiator | Lot | Ref | Number | Revision |
|---|---|---|---|---|---|---|
| 93M | 0407 | ACC | 60L111 | DWG | 90482 | A |

REVIEWED WITH COMMENT
MONORAILS PROJECT

-Drawing shall be updated according to the comments on the GA drawing.
-Approval is subject to approval of coordination package between multi-disciplines.

All holes are 22mm U.N.O  Length & Area & Weight per piece

| Mark | Profile | Grade | QTY | Length | Area | Weight |
|---|---|---|---|---|---|---|
| DF14 | FLT15*150 | S355J2N | 3 | 3894.0 | 1.29 | 68.6 |

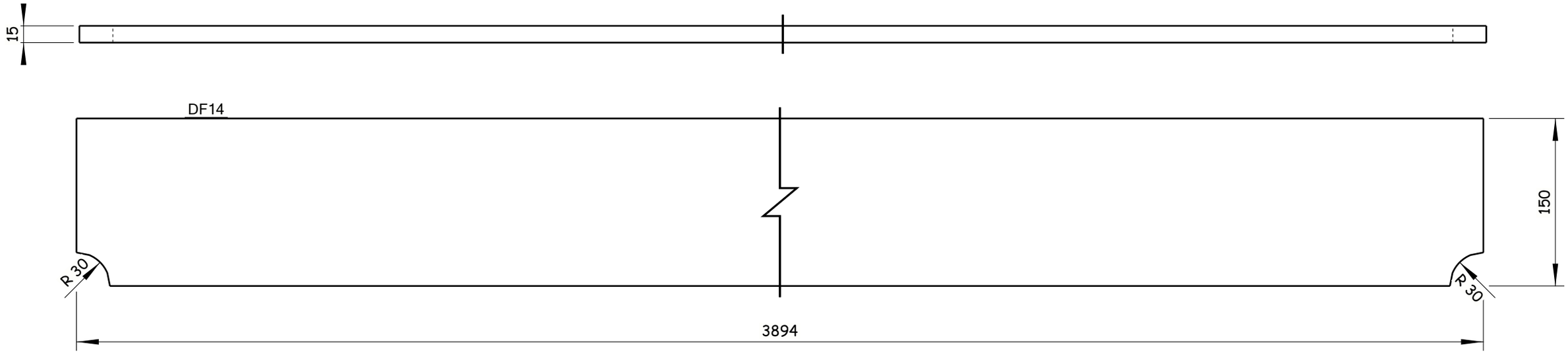


3 Nos. REQUIRED AS DRAWN E.SHDF14

GENERAL NOTES:

1. ALL DIMENSIONS ARE IN MILLIMETERS UNLESS OTHERWISE SPECIFIED.
2. LEVELS ARE IN METERS
3. DESIGN SERVICE LIFE OF 100 YEARS.
4. FLANGES OF TOP AND BOTTOM CHORDS TO BE SUPPLIED WITH IMPROVED THROUGH THICKNESS PROPERTIES Z25 ACCORDING TO EN10164.

REFERENCE DRAWINGS

| | |
|---|---|
| 1 | 93M-BOA-NAT-LOT-26612 |
| 2 | |
| 3 | |
| 4 | |
| 5 | |
| 6 | |
| 7 | |
| 8 | |
| 9 | |
| 10 | |
| 11 | |

6TH OF OCTOBER CITY RAIL TRANSIT MONORAIL &
NEW CAPITAL CITY RAIL TRANSIT MONORAIL

The Authority | Hill International Authority Consultant | ORASCOM CONSTRUCTION | BOMBARDIER | Main Contractor | SENER | SHAKER CONSULTANCY GROUP | Designer

CONTRACTOR & CONSULTANT:
ENGINEERING HOUSE FOR CONSULTANCY

6 October Monorail
Engineering Unit
Valid For Construction

SCALE: AS SHOWN | SHD DRAWING | DATE: 20.11.2024

DRAWING TITLE:
6TH OF OCTOBER MONORAIL
**SHOP DRAWING FOR STRADDLE BENT 6OL11-22C2**
**STEEL RAFTER.**
DF14

| REV | DATE | BY | DESCRIPTION | CHK | APD |
|---|---|---|---|---|---|
| A | 20-11-24 | E.SH | ISSUE FOR APPROVAL | A.SH | M.M |

| Project Code | Rubric | Initiator | Lot | Ref | Number | Revision |
|---|---|---|---|---|---|---|
| 93M | 0407 | ACC | 60L11 | DWG | 90483 | A |

Tekla Structures

| All holes are 22mm U.N.O Length & Area & Weight per piece | | | | | | |
|---|---|---|---|---|---|---|
| DF15 | PL40*2350 | S355K2N | 2 | 3717.2 | 17.39 | 2640.3 |
| Mark | Profile | Grade | QTY | Length | Area | Weight |

REVIEWED WITH COMMENT
MONORAILS PROJECT

-Drawing shall be updated according to the comments on the GA drawing.
-Approval is subject to approval of coordination package between multi-disciplines.

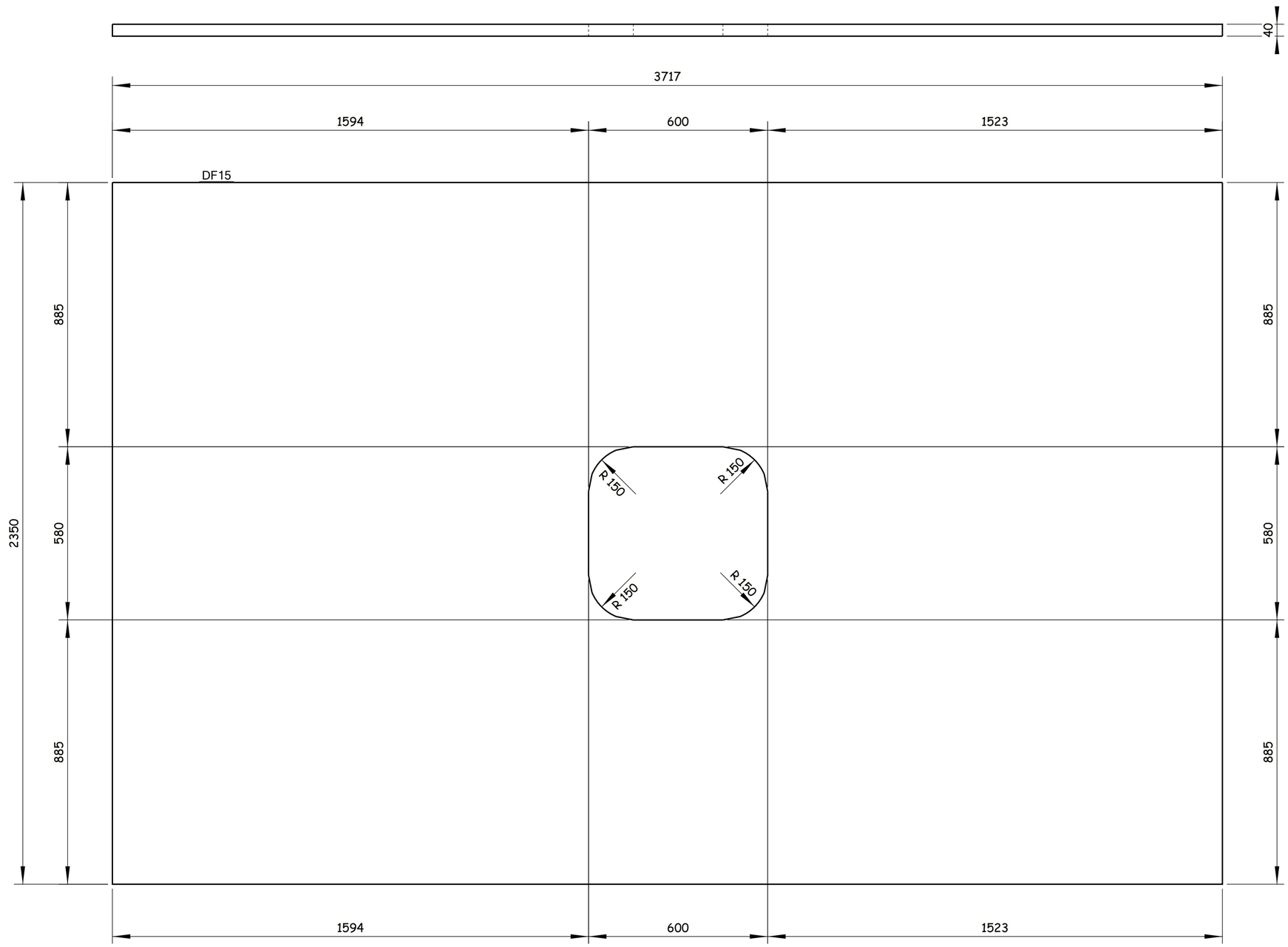


2 Nos. REQUIRED AS DRAWN E.SHDF15

Tekla Structures

GENERAL NOTES:

1. ALL DIMENSIONS ARE IN MILLIMETERS UNLESS OTHERWISE SPECIFIED.
2. LEVELS ARE IN METERS
3. DESIGN SERVICE LIFE OF 100 YEARS.
4. FLANGES OF TOP AND BOTTOM CHORDS TO BE SUPPLIED WITH IMPROVED THROUGH THICKNESS PROPERTIES Z25 ACCORDING TO EN10164.

REFERENCE DRAWINGS

| | |
|---|---|
| 1 | 93M-BOA-NAT-LOT-26612 |
| 2 | |
| 3 | |
| 4 | |
| 5 | |
| 6 | |
| 7 | |
| 8 | |
| 9 | |
| 10 | |
| 11 | |

6TH OF OCTOBER CITY RAIL TRANSIT MONORAIL &
NEW CAPITAL CITY RAIL TRANSIT MONORAIL

The Authority | Hill International Authority Consultant | Main Contractor | Designer

CONTRACTOR:
CONSULTANT:
ENGINEERING HOUSE FOR CONSULTANCY

| SCALE | SHOP DRAWING | DATE |
|---|---|---|
| AS SHOWN | | 20.11.2024 |

| REV | DATE | BY | DESCRIPTION | CHK | APD |
|---|---|---|---|---|---|
| A | 20-11-24 | E.SH | ISSUE FOR APPROVAL | A.SH | M.M |

6 October Monorail
Engineering Unit
Valid For Construction

DRAWING TITLE:
6TH OF OCTOBER MONORAIL
SHOP DRAWING FOR STRADDLE BENT 6OL11-22C2
STEEL RAFTER.
DF15

| Project Code | Rubric | Initiator | Lot | Ref | Number | Revision |
|---|---|---|---|---|---|---|
| 9 3 M | 0 4 0 7 | A C C | 6 0 L 1 1 | D W G | 90484 | A |

REVIEWED WITH COMMENT
MONORAILS PROJECT

-Drawing shall be updated according to the comments on the GA drawing.
-Approval is subject to approval of coordination package between multi-disciplines.

All holes are 22mm U.N.O  Length & Area & Weight per piece

| Mark | Profile | Grade | QTY | Length | Area | Weight |
|---|---|---|---|---|---|---|
| DF16 | PL20*600 | S355J2N | 5 | 2360.0 | 1.59 | 112.3 |

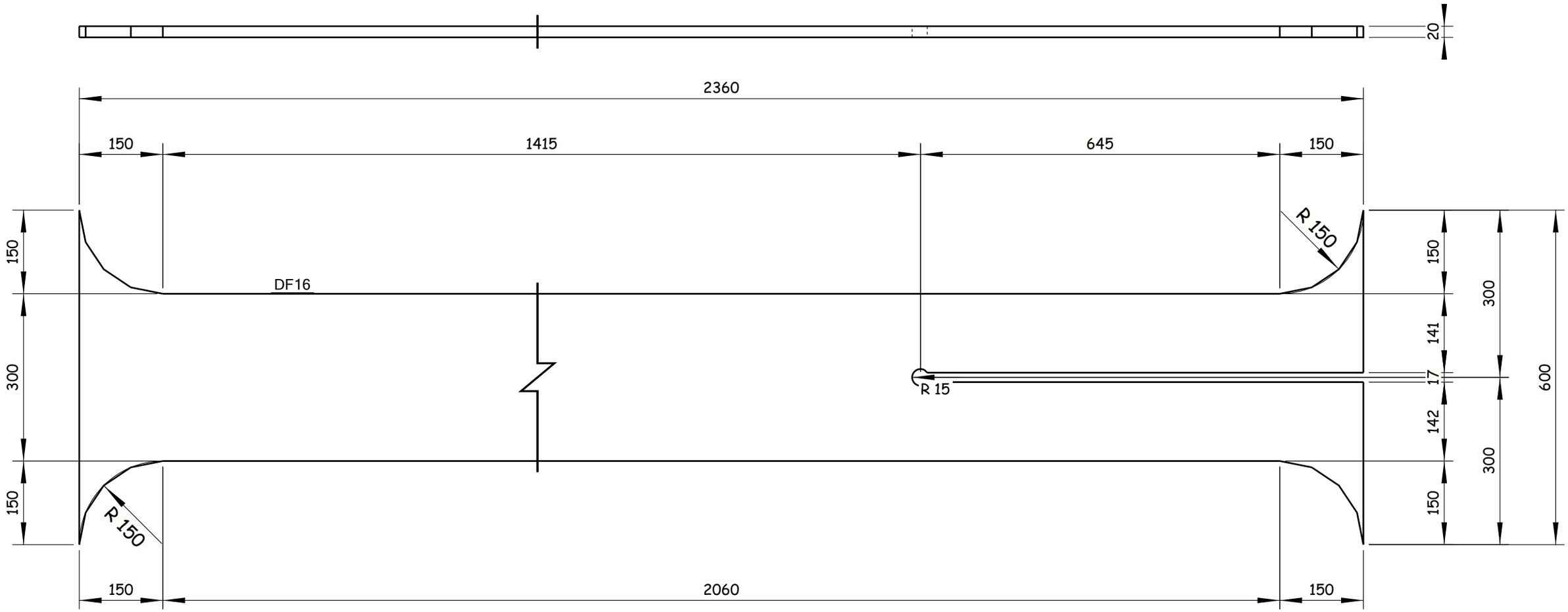


5 Nos. REQUIRED AS DRAWN E.SHDF16

Tekla Structures

GENERAL NOTES:

1. ALL DIMENSIONS ARE IN MILLIMETERS UNLESS OTHERWISE SPECIFIED.
2. LEVELS ARE IN METERS
3. DESIGN SERVICE LIFE OF 100 YEARS.
4. FLANGES OF TOP AND BOTTOM CHORDS TO BE SUPPLIED WITH IMPROVED THROUGH THICKNESS PROPERTIES Z25 ACCORDING TO EN10164.

REFERENCE DRAWINGS

| | |
|---|---|
| 1 | 93M-BOA-NAT-LOT-26612 |
| 2 | |
| 3 | |
| 4 | |
| 5 | |
| 6 | |
| 7 | |
| 8 | |
| 9 | |
| 10 | |
| 11 | |

6TH OF OCTOBER CITY RAIL TRANSIT MONORAIL &
NEW CAPITAL CITY RAIL TRANSIT MONORAIL

The Authority
Hill International
Authority Consultant

ORASCOM CONSTRUCTION
BOMBARDIER
Main Contractor

SENER
SHAKER CONSULTANCY GROUP
Designer

CONTRACTOR / CONSULTANT:
ENGINEERING HOUSE FOR CONSULTANCY

6 October Monorail
Engineering Unit
Valid For Construction

| SCALE | SHD DRAWING | DATE |
|---|---|---|
| AS SHOWN | | 20.11.2024 |

| REV | DATE | BY | DESCRIPTION | CHK | APD |
|---|---|---|---|---|---|
| A | 20-11-24 | E.SH | ISSUE FOR APPROVAL | A.SH | M.M |

DRAWING TITLE:
6TH OF OCTOBER MONORAIL
**SHOP DRAWING FOR STRADDLE BENT 6OL11-22C2**
**STEEL RAFTER.**
DF16

| Project Code | Rubric | Initiator | Lot | Ref | Number | Revision |
|---|---|---|---|---|---|---|
| 93M | 04 07 | ACC | 60 L11 | DWG | 90485 | A |

REVIEWED WITH COMMENT
MONORAILS PROJECT

-Drawing shall be updated according to the comments on the GA drawing.
-Approval is subject to approval of coordination package between multi-disciplines.

| All holes are 22mm U.N.O Length & Area & Weight per piece | | | | | | |
|---|---|---|---|---|---|---|
| DW1 | FLT10*400 | S355J2N | 15 | 2360.0 | 1.90 | 71.7 |
| Mark | Profile | Grade | QTY | Length | Area | Weight |

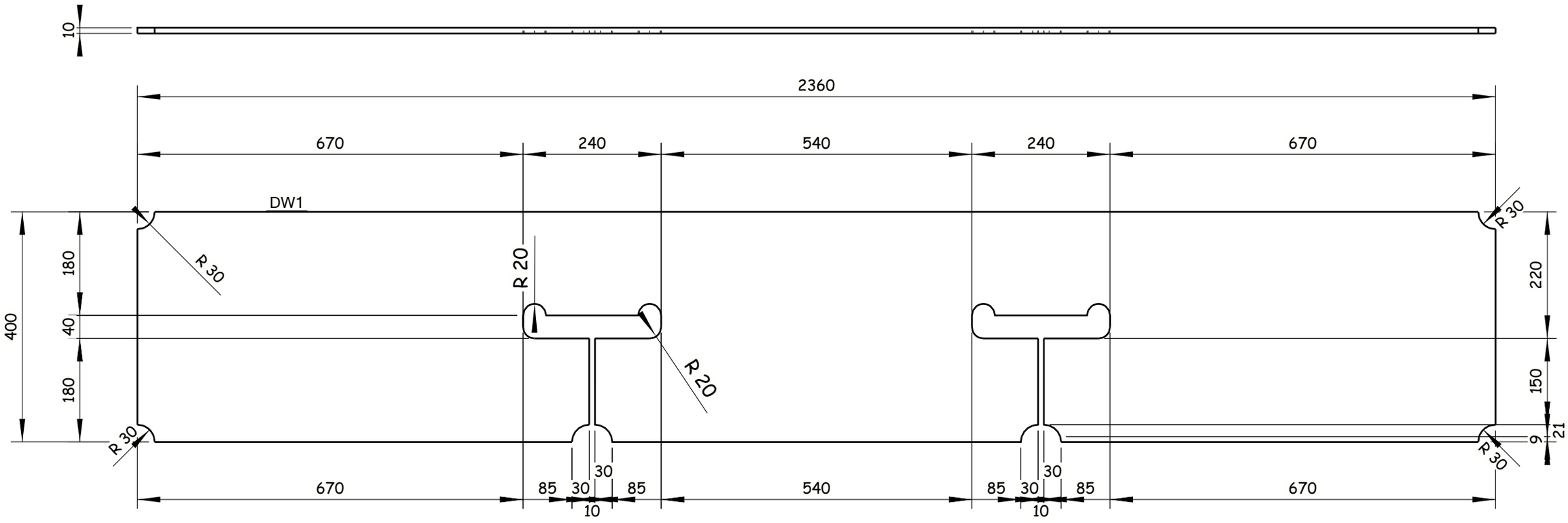


15 Nos. REQUIRED AS DRAWN E.SHDW1

6 October Monorail
Engineering Unit
Valid For Construction

GENERAL NOTES:

1. ALL DIMENSIONS ARE IN MILLIMETERS UNLESS OTHERWISE SPECIFIED.
2. LEVELS ARE IN METERS
3. DESIGN SERVICE LIFE OF 100 YEARS.
4. FLANGES OF TOP AND BOTTOM CHORDS TO BE SUPPLIED WITH IMPROVED THROUGH THICKNESS PROPERTIES Z25 ACCORDING TO EN10164.

REFERENCE DRAWINGS

| | |
|---|---|
| 1 | 93M-BOA-NAT-LOT-26612 |
| 2 | |
| 3 | |
| 4 | |
| 5 | |
| 6 | |
| 7 | |
| 8 | |
| 9 | |
| 10 | |
| 11 | |

6TH OF OCTOBER CITY RAIL TRANSIT MONORAIL &
NEW CAPITAL CITY RAIL TRANSIT MONORAIL

The Authority — Hill International — Authority Consultant
Main Contractor
Designer

CONTRACTOR & CONSULTANT:
ENGINEERING HOUSE FOR CONSULTANCY

| SCALE | SHOP DRAWING | DATE |
|---|---|---|
| AS SHOWN | | 20.11.2024 |

| REV | DATE | BY | DESCRIPTION | CHK | APD |
|---|---|---|---|---|---|
| A | 20-11-24 | E.SH | ISSUE FOR APPROVAL | A.SH | M.M |

DRAWING TITLE:
6TH OF OCTOBER MONORAIL
**SHOP DRAWING FOR STRADDLE BENT 6OL11-22C2**
**STEEL RAFTER.**
DW1

| Project Code | Rubric | Initiator | Lot | Ref | Number | Revision |
|---|---|---|---|---|---|---|
| 9 3 | M 0 4 0 7 | A C C | 6 0 L 1 1 | D W G | 90486 | A |

Tekla Structures

REVIEWED WITH COMMENT
MONORAILS PROJECT

-Drawing shall be updated according to the comments on the GA drawing.
-Approval is subject to approval of coordination package between multi-disciplines.

All holes are 22mm U.N.O Length & Area & Weight per piece

| Mark | Profile | Grade | QTY | Length | Area | Weight |
|---|---|---|---|---|---|---|
| DW2 | FLT10*400 | S355J2N | 14 | 2309.9 | 1.84 | 69.1 |

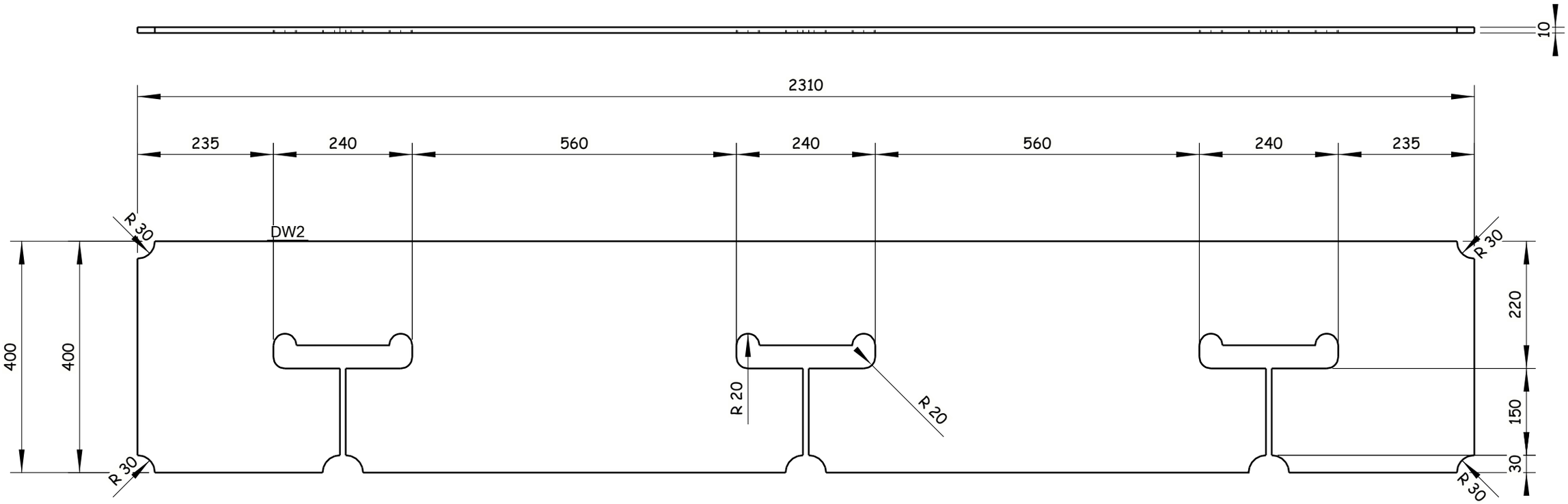


14 Nos. REQUIRED AS DRAWN E.SHDW2

Tekla Structures

GENERAL NOTES:

1. ALL DIMENSIONS ARE IN MILLIMETERS UNLESS OTHERWISE SPECIFIED.
2. LEVELS ARE IN METERS
3. DESIGN SERVICE LIFE OF 100 YEARS.
4. FLANGES OF TOP AND BOTTOM CHORDS TO BE SUPPLIED WITH IMPROVED THROUGH THICKNESS PROPERTIES Z25 ACCORDING TO EN10164.

REFERENCE DRAWINGS

| | |
|---|---|
| 1 | 93M-BOA-NAT-LOT-26612 |
| 2 | |
| 3 | |
| 4 | |
| 5 | |
| 6 | |
| 7 | |
| 8 | |
| 9 | |
| 10 | |
| 11 | |

6TH OF OCTOBER CITY RAIL TRANSIT MONORAIL &
NEW CAPITAL CITY RAIL TRANSIT MONORAIL

The Authority
Hill International
Authority Consultant

ORASCOM CONSTRUCTION
BOMBARDIER
Main Contractor

SENER
SHAKER CONSULTANCY GROUP
Designer

CONTRACTOR & CONSULTANT:
EHC
ENGINEERING HOUSE FOR CONSULTANCY

6 October Monorail
Engineering Unit
Valid For Construction

| REV | DATE | BY | DESCRIPTION | CHK | APD |
|---|---|---|---|---|---|
| A | 20-11-24 | E.SH | ISSUE FOR APPROVAL | A.SH | M.M |

SCALE: AS SHOWN | SHD DRAWING | DATE: 20.11.2024

DRAWING TITLE:
6TH OF OCTOBER MONORAIL
**SHOP DRAWING FOR STRADDLE BENT 6OL11-22C2**
**STEEL RAFTER.**
DW2

| Project Code | Rubric | Initiator | Lot | Ref | Number | Revision |
|---|---|---|---|---|---|---|
| 93 | M04 | 07 | ACC | 60 | L11 | DWG | 90487 | A |

| All holes are 22mm U.N.O Length & Area & Weight per piece | | | | | | |
|---|---|---|---|---|---|---|
| DW3 | FLT10*400 | S355J2N | 10 | 1569.9 | 1.26 | 47.6 |
| Mark | Profile | Grade | QTY | Length | Area | Weight |

REVIEWED WITH COMMENT
MONORAILS PROJECT

-Drawing shall be updated according to the comments on the GA drawing.
-Approval is subject to approval of coordination package between multi-disciplines.

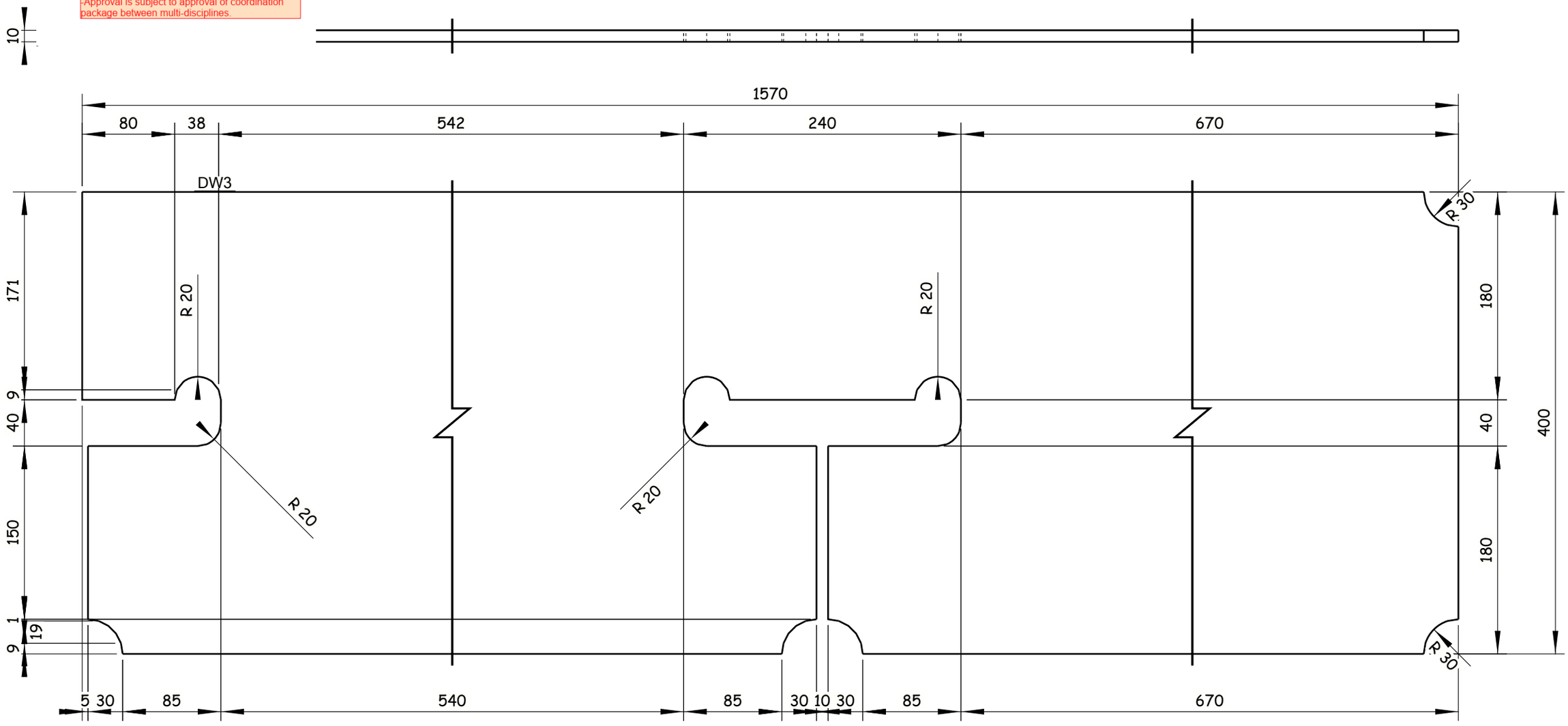


10 Nos. REQUIRED AS DRAWN E.SHDW3

6 October Monorail
Engineering Unit
Valid For Construction

Tekla Structures

GENERAL NOTES:

1. ALL DIMENSIONS ARE IN MILLIMETERS UNLESS OTHERWISE SPECIFIED.
2. LEVELS ARE IN METERS
3. DESIGN SERVICE LIFE OF 100 YEARS.
4. FLANGES OF TOP AND BOTTOM CHORDS TO BE SUPPLIED WITH IMPROVED THROUGH THICKNESS PROPERTIES Z25 ACCORDING TO EN10164.

REFERENCE DRAWINGS

| | |
|---|---|
| 1 | 93M-BOA-NAT-LOT-26612 |
| 2 | |
| 3 | |
| 4 | |
| 5 | |
| 6 | |
| 7 | |
| 8 | |
| 9 | |
| 10 | |
| 11 | |

6TH OF OCTOBER CITY RAIL TRANSIT MONORAIL &
NEW CAPITAL CITY RAIL TRANSIT MONORAIL

The Authority
Hill International
Authority Consultant

ORASCOM CONSTRUCTION
BOMBARDIER
Main Contractor

SENER
SHAKER CONSULTANCY GROUP
Designer

CONTRACTOR / CONSULTANT :
ENGINEERING HOUSE FOR CONSULTANCY

SCALE: AS SHOWN | SHOP DRAWING | DATE: 20.11.2024

| REV | DATE | BY | DESCRIPTION | CHK | APD |
|---|---|---|---|---|---|
| A | 20-11-24 | E.SH | ISSUE FOR APPROVAL | A.SH | M.M |

DRAWING TITLE:
6TH OF OCTOBER MONORAIL
**SHOP DRAWING FOR STRADDLE BENT 6OL11-22C2**
**STEEL RAFTER.**
DW3

| Project Code | Rubric | Initiator | Lot | Ref | Number | Revision |
|---|---|---|---|---|---|---|
| 93M | 04 07 | ACC | 60L11 | DWG | 90488 | A |

REVIEWED WITH COMMENT
MONORAILS PROJECT

-Drawing shall be updated according to the comments on the GA drawing.
-Approval is subject to approval of coordination package between multi-disciplines.

All holes are 22mm U.N.O Length & Area & Weight per piece

| Mark | Profile | Grade | QTY | Length | Area | Weight |
|---|---|---|---|---|---|---|
| DW4 | FLT10*400 | S355J2N | 10 | 1723.2 | 1.38 | 51.8 |

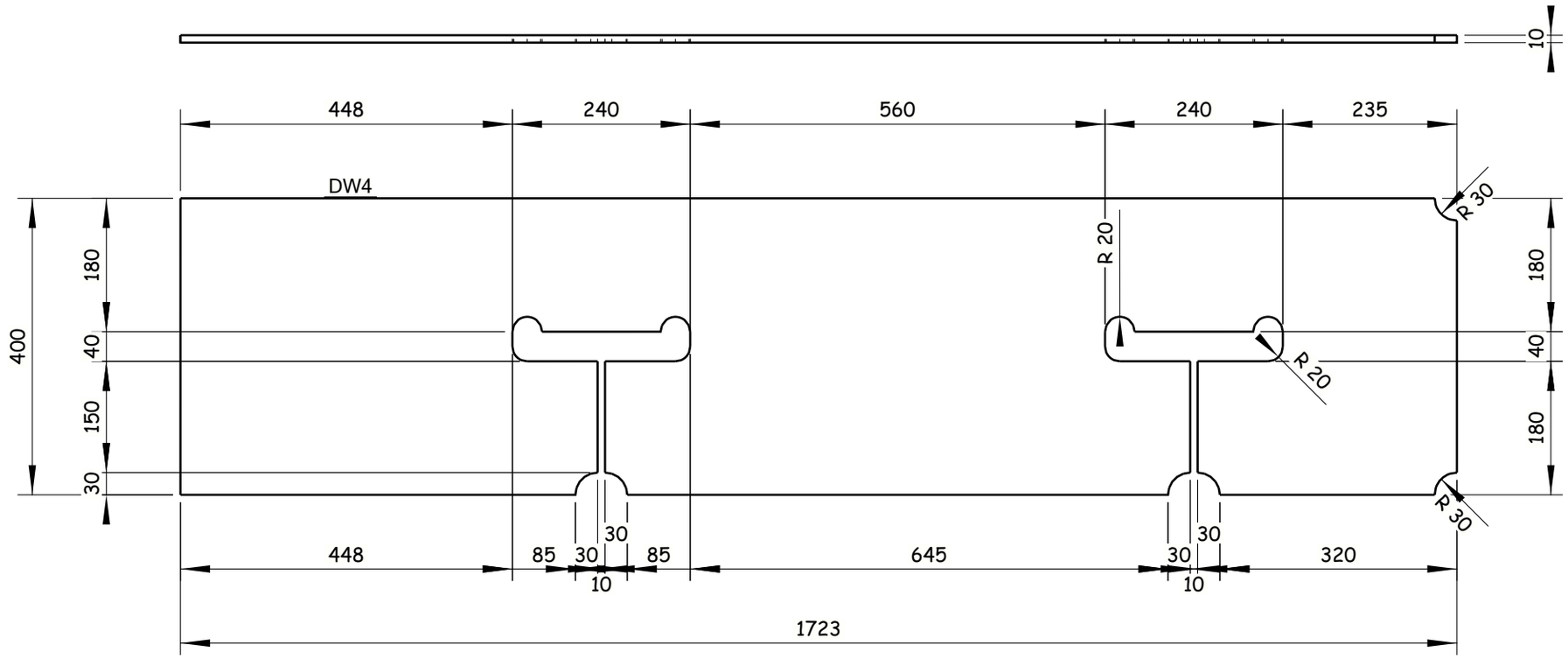


10 Nos. REQUIRED AS DRAWN E.SHDW4

Tekla Structures

GENERAL NOTES:

1. ALL DIMENSIONS ARE IN MILLIMETERS UNLESS OTHERWISE SPECIFIED.
2. LEVELS ARE IN METERS
3. DESIGN SERVICE LIFE OF 100 YEARS.
4. FLANGES OF TOP AND BOTTOM CHORDS TO BE SUPPLIED WITH IMPROVED THROUGH THICKNESS PROPERTIES Z25 ACCORDING TO EN10164.

REFERENCE DRAWINGS

| | |
|---|---|
| 1 | 93M-BOA-NAT-LOT-26612 |
| 2 | |
| 3 | |
| 4 | |
| 5 | |
| 6 | |
| 7 | |
| 8 | |
| 9 | |
| 10 | |
| 11 | |

6TH OF OCTOBER CITY RAIL TRANSIT MONORAIL &
NEW CAPITAL CITY RAIL TRANSIT MONORAIL

The Authority — Hill International Authority Consultant — ORASCOM CONSTRUCTION — BOMBARDIER — Main Contractor — SENER SHAKER CONSULTANCY GROUP — Designer

CONTRACTOR CONSULTANT: ENGINEERING HOUSE FOR CONSULTANCY

SCALE: AS SHOWN | SHD DRAWING | DATE: 20.11.2024

DRAWING TITLE:
6TH OF OCTOBER MONORAIL
**SHOP DRAWING FOR STRADDLE BENT 6OL11-22C2**
**STEEL RAFTER.**
DW4

| REV | DATE | BY | DESCRIPTION | CHK | APD |
|---|---|---|---|---|---|
| A | 20-11-24 | E.SH | ISSUE FOR APPROVAL | A.SH | M.M |

| Project Code | Rubric | Initiator | Lot | Ref | Number | Revision |
|---|---|---|---|---|---|---|
| 93 | M0407 | ACC | 60L11 | DWG | 90489 | A |

6 October Monorail
Engineering Unit
Valid For Construction

| All holes are 22mm U.N.O Length & Area & Weight per piece | | | | | | |
|---|---|---|---|---|---|---|
| DW5 | PL10*424.6 | S355J2N | 1 | 2360.0 | 1.99 | 74.6 |
| Mark | Profile | Grade | QTY | Length | Area | Weight |

REVIEWED WITH COMMENT MONORAILS PROJECT

-Drawing shall be updated according to the comments on the GA drawing.
-Approval is subject to approval of coordination package between multi-disciplines.

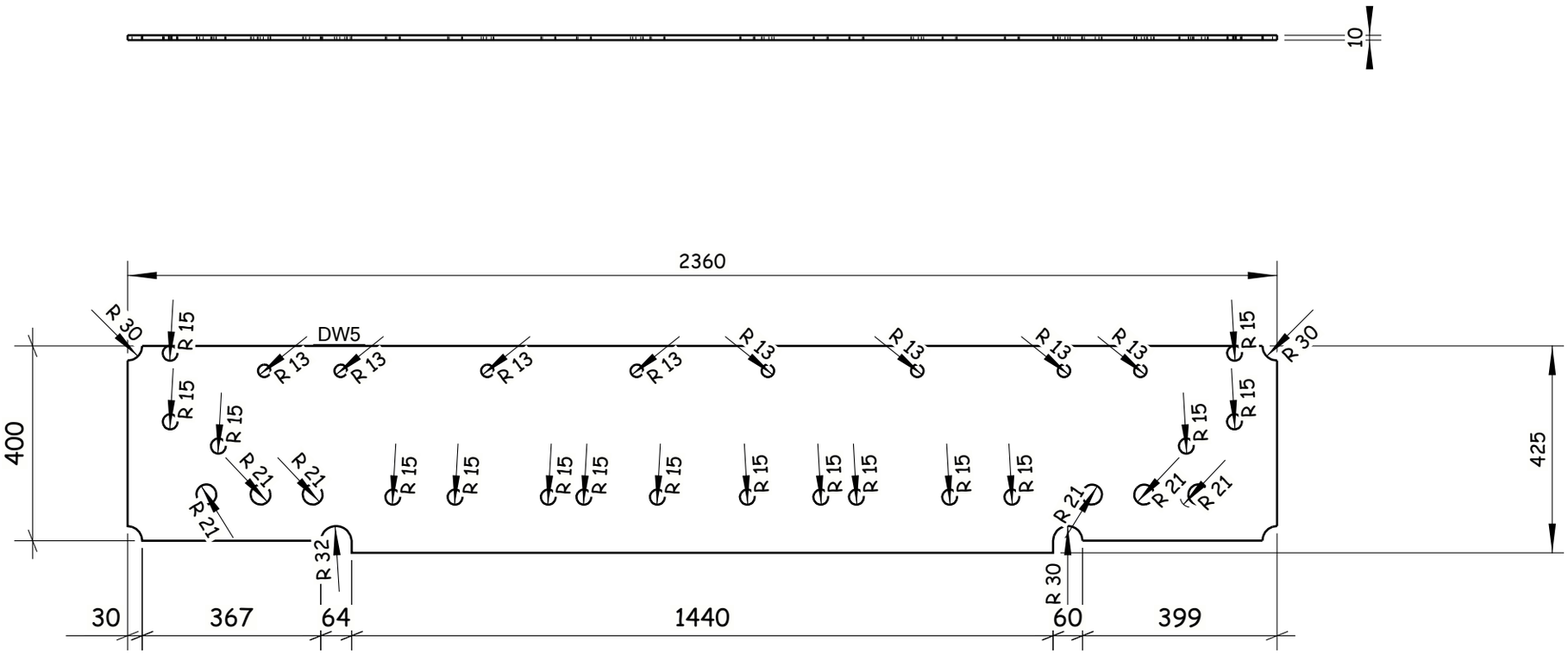


1 Nos. REQUIRED AS DRAWN E.SHDW5

6 October Monorail Engineering Unit
Valid For Construction

GENERAL NOTES:

1. ALL DIMENSIONS ARE IN MILLIMETERS UNLESS OTHERWISE SPECIFIED.
2. LEVELS ARE IN METERS
3. DESIGN SERVICE LIFE OF 100 YEARS.
4. FLANGES OF TOP AND BOTTOM CHORDS TO BE SUPPLIED WITH IMPROVED THROUGH THICKNESS PROPERTIES Z25 ACCORDING TO EN10164.

REFERENCE DRAWINGS

| | |
|---|---|
| 1 | 93M-BOA-NAT-LOT-26612 |
| 2 | |
| 3 | |
| 4 | |
| 5 | |
| 6 | |
| 7 | |
| 8 | |
| 9 | |
| 10 | |
| 11 | |

6TH OF OCTOBER CITY RAIL TRANSIT MONORAIL & NEW CAPITAL CITY RAIL TRANSIT MONORAIL

وزارة النقل MINISTRY OF TRANSPORT — The Authority
Hill International — Authority Consultant
ORASCOM CONSTRUCTION — BOMBARDIER — Main Contractor
SENER — SHAKER CONSULTANCY GROUP — Designer

CONTRACTOR CONSULTANT: HEHC ENGINEERING HOUSE FOR CONSULTANCY

| SCALE | SHOP DRAWING | DATE |
|---|---|---|
| AS SHOWN | | 20.11.2024 |

| REV | DATE | BY | DESCRIPTION | CHK | APD |
|---|---|---|---|---|---|
| A | 20-11-24 | E.SH | ISSUE FOR APPROVAL | A.SH | M.M |

DRAWING TITLE:
6TH OF OCTOBER MONORAIL
**SHOP DRAWING FOR STRADDLE BENT 6OL11-22C2**
**STEEL RAFTER.**
DW5

| Project Code | Rubric | Initiator | Lot | Ref | Number | Revision |
|---|---|---|---|---|---|---|
| 93M | 0407 | ACC | 6OL11 | DWG | 90490 | A |

Tekla Structures

REVIEWED WITH COMMENT
MONORAILS PROJECT

-Drawing shall be updated according to the comments on the GA drawing.
-Approval is subject to approval of coordination package between multi-disciplines.

All holes are 22mm U.N.O  Length & Area & Weight per piece

| Mark | Profile | Grade | QTY | Length | Area | Weight |
|---|---|---|---|---|---|---|
| DW6 | FLT10*400 | S355J2N | 2 | 1144.8 | 0.92 | 34.6 |

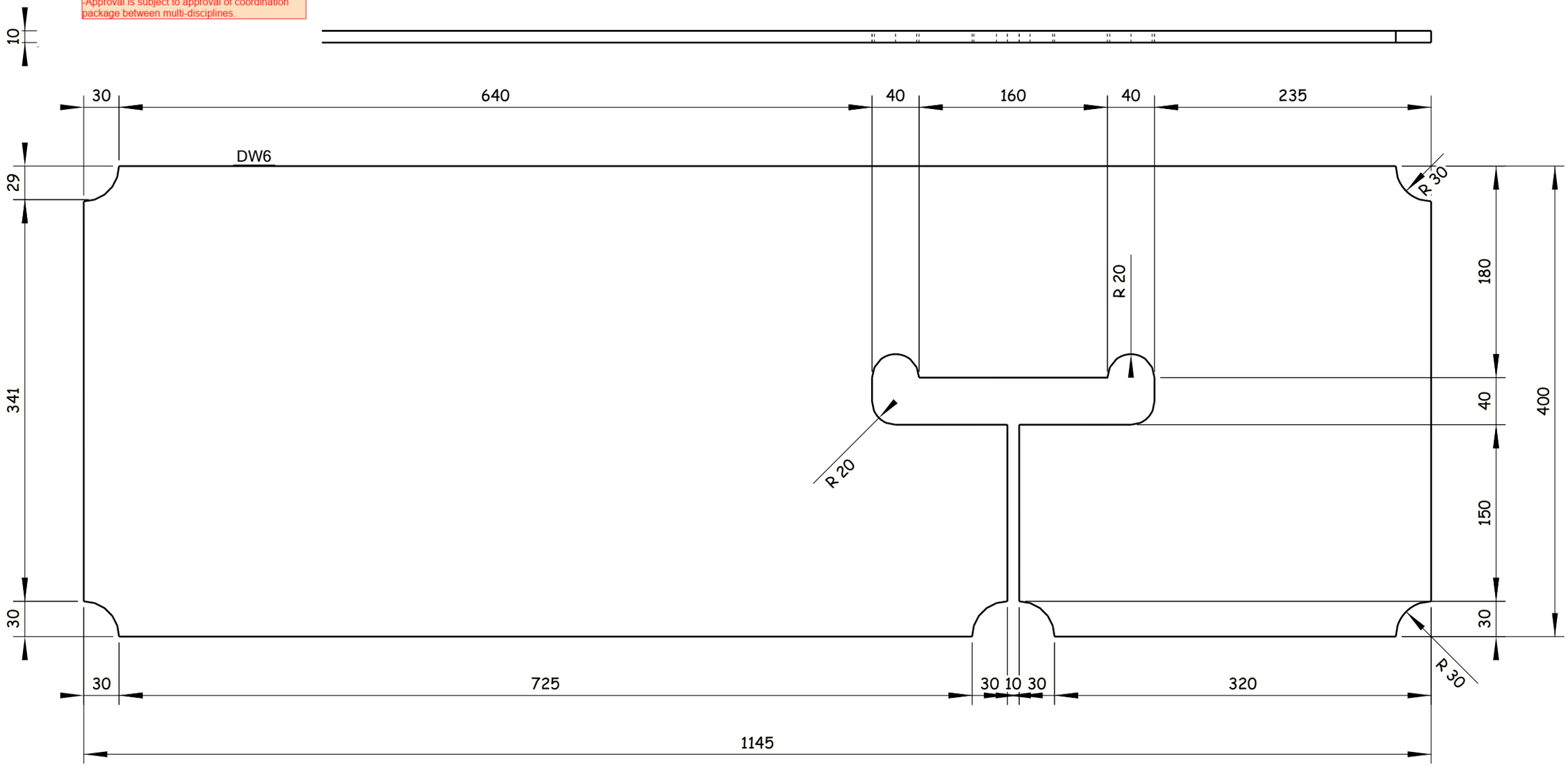


2 Nos. REQUIRED AS DRAWN E.SHDW6

Tekla Structures

GENERAL NOTES:

1. ALL DIMENSIONS ARE IN MILLIMETERS UNLESS OTHERWISE SPECIFIED.
2. LEVELS ARE IN METERS
3. DESIGN SERVICE LIFE OF 100 YEARS.
4. FLANGES OF TOP AND BOTTOM CHORDS TO BE SUPPLIED WITH IMPROVED THROUGH THICKNESS PROPERTIES Z25 ACCORDING TO EN10164.

REFERENCE DRAWINGS

| | |
|---|---|
| 1 | 93M-BOA-NAT-LOT-26612 |
| 2 | |
| 3 | |
| 4 | |
| 5 | |
| 6 | |
| 7 | |
| 8 | |
| 9 | |
| 10 | |
| 11 | |

6TH OF OCTOBER CITY RAIL TRANSIT MONORAIL &
NEW CAPITAL CITY RAIL TRANSIT MONORAIL

The Authority | Hill International Authority Consultant | ORASCOM CONSTRUCTION | BOMBARDIER | Main Contractor | SENER | SHAKER CONSULTANCY GROUP | Designer

CONTRACTOR / CONSULTANT:
ENGINEERING HOUSE FOR CONSULTANCY

| REV | DATE | BY | DESCRIPTION | CHK | APD |
|---|---|---|---|---|---|
| A | 20-11-24 | E.SH | ISSUE FOR APPROVAL | A.SH | M.M |

SCALE: AS SHOWN | SHD DRAWING | DATE: 20.11.2024

6 October Monorail
Engineering Unit
Valid For Construction

DRAWING TITLE:
6TH OF OCTOBER MONORAIL
**SHOP DRAWING FOR STRADDLE BENT 6OL11-22C2 STEEL RAFTER.**
DW6

| Project Code | Rubric | Initiator | Lot | Ref | Number | Revision |
|---|---|---|---|---|---|---|
| 93 | M04 | 07 | ACC | 60 | L11 | DWG | 90491 | A |

REVIEWED WITH COMMENT
MONORAILS PROJECT

-Drawing shall be updated according to the comments on the GA drawing.
-Approval is subject to approval of coordination package between multi-disciplines.

All holes are 22mm U.N.O  Length & Area & Weight per piece

| Mark | Profile | Grade | QTY | Length | Area | Weight |
|---|---|---|---|---|---|---|
| DW7 | FLT10*400 | S355J2N | 2 | 1120.1 | 0.90 | 33.1 |

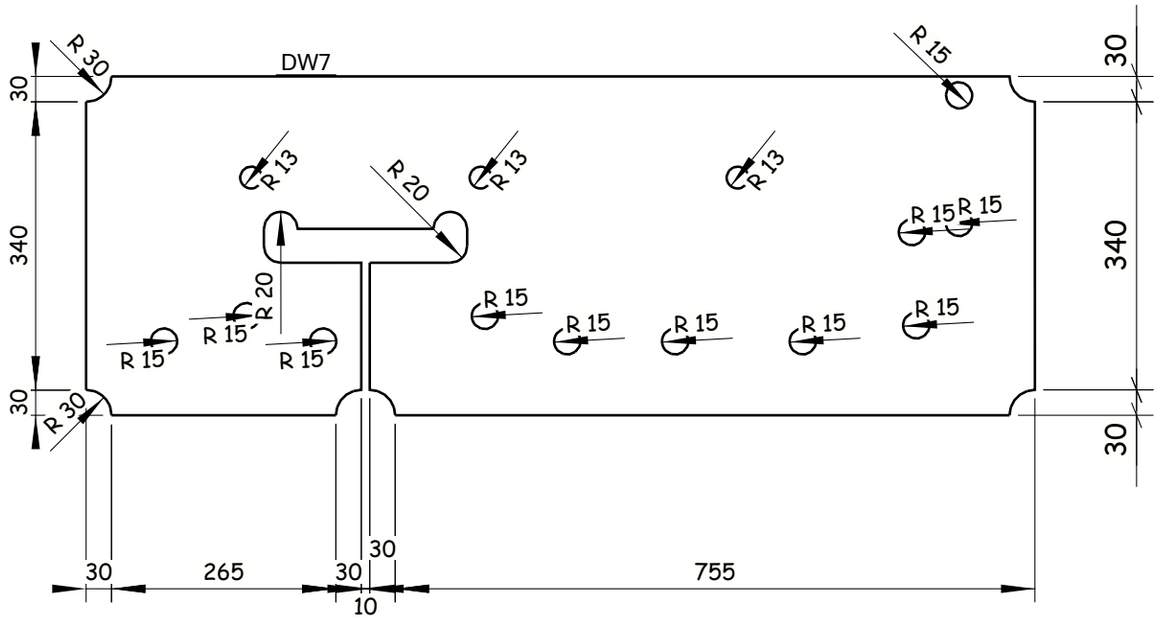


2 Nos. REQUIRED AS DRAWN E.SHDW7

Tekla Structures

GENERAL NOTES:

1. ALL DIMENSIONS ARE IN MILLIMETERS UNLESS OTHERWISE SPECIFIED.
2. LEVELS ARE IN METERS
3. DESIGN SERVICE LIFE OF 100 YEARS.
4. FLANGES OF TOP AND BOTTOM CHORDS TO BE SUPPLIED WITH IMPROVED THROUGH THICKNESS PROPERTIES Z25 ACCORDING TO EN10164.

REFERENCE DRAWINGS

| | |
|---|---|
| 1 | 93M-BOA-NAT-LOT-26612 |
| 2 | |
| 3 | |
| 4 | |
| 5 | |
| 6 | |
| 7 | |
| 8 | |
| 9 | |
| 10 | |
| 11 | |

6TH OF OCTOBER CITY RAIL TRANSIT MONORAIL &
NEW CAPITAL CITY RAIL TRANSIT MONORAIL

The Authority
Hill International
Authority Consultant

Main Contractor

Designer

CONTRACTOR CONSULTANT :
ENGINEERING HOUSE FOR CONSULTANCY

6 October Monorail
Engineering Unit
Valid For Construction

| SCALE | CHD/DRWING | DATE |
|---|---|---|
| AS SHOWN | | 20.11.2024 |

| REV | DATE | BY | DESCRIPTION | CHK | APD |
|---|---|---|---|---|---|
| A | 20-11-24 | E.SH | ISSUE FOR APPROVAL | A.SH | M.M |

DRAWING TITLE:
6TH OF OCTOBER MONORAIL
**SHOP DRAWING FOR STRADDLE BENT 6OL11-22C2**
**STEEL RAFTER.**
DW7

| Project Code | Rubric | Initiator | Lot | Ref | Number | Revision |
|---|---|---|---|---|---|---|
| 93 | M0407 | ACC | 60L11 | DWG | 90492 | A |

REVIEWED WITH COMMENT
MONORAILS PROJECT

-Drawing shall be updated according to the comments on the GA drawing.
-Approval is subject to approval of coordination package between multi-disciplines.

All holes are 22mm U.N.O Length & Area & Weight per piece

| Mark | Profile | Grade | QTY | Length | Area | Weight |
|---|---|---|---|---|---|---|
| FP1 | PL25*2800 | S355J2N | 1 | 12000.0 | 67.94 | 6594.0 |

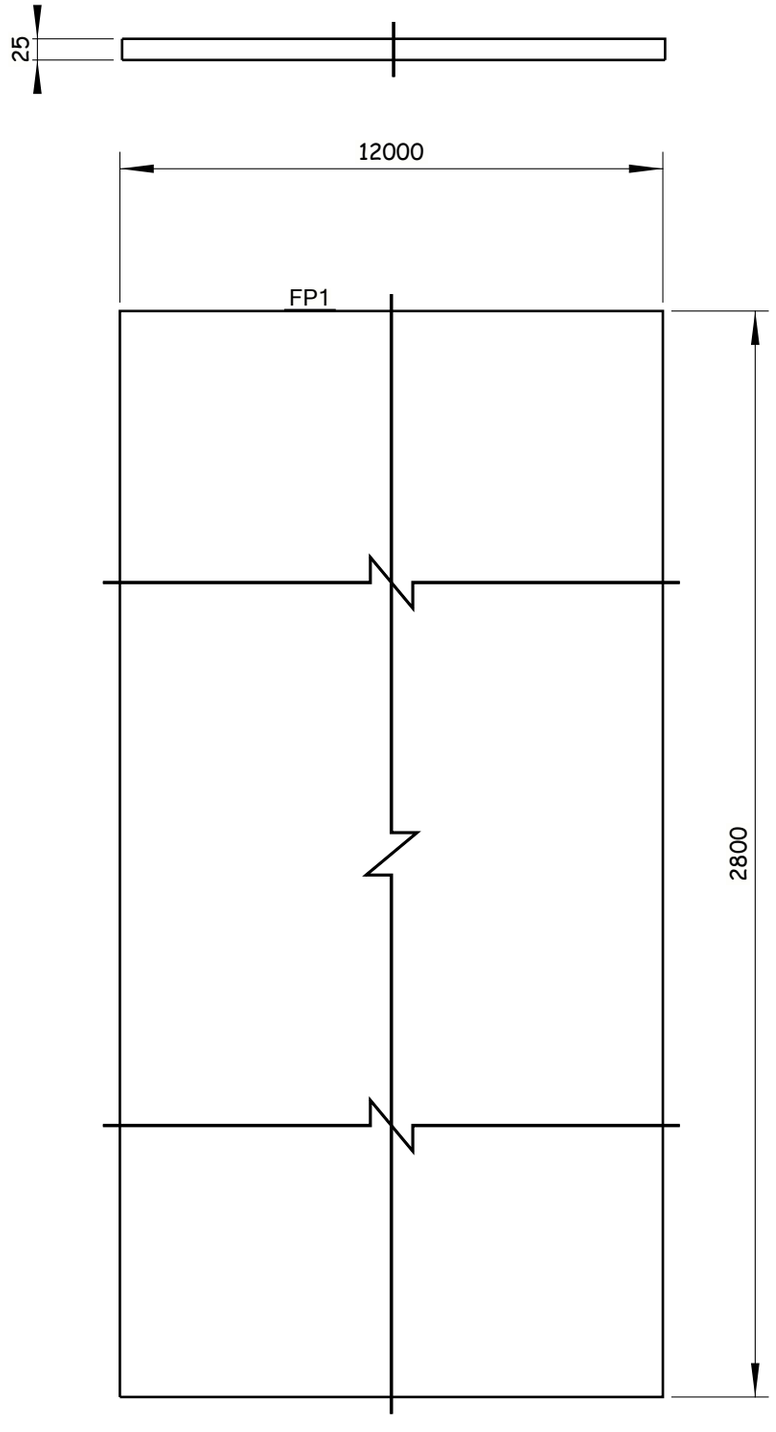


1 Nos. REQUIRED AS DRAWN E.SHFP1

Tekla Structures

GENERAL NOTES:

1. ALL DIMENSIONS ARE IN MILLIMETERS UNLESS OTHERWISE SPECIFIED.
2. LEVELS ARE IN METERS
3. DESIGN SERVICE LIFE OF 100 YEARS.
4. FLANGES OF TOP AND BOTTOM CHORDS TO BE SUPPLIED WITH IMPROVED THROUGH THICKNESS PROPERTIES Z25 ACCORDING TO EN10164.

REFERENCE DRAWINGS

| | |
|---|---|
| 1 | 93M-BOA-NAT-LOT-26612 |
| 2 | |
| 3 | |
| 4 | |
| 5 | |
| 6 | |
| 7 | |
| 8 | |
| 9 | |
| 10 | |
| 11 | |

6TH OF OCTOBER CITY RAIL TRANSIT MONORAIL &
NEW CAPITAL CITY RAIL TRANSIT MONORAIL

The Authority
Hill International
Authority Consultant

Main Contractor

Designer

CONTRACTOR & CONSULTANT:
ENGINEERING HOUSE FOR CONSULTANCY

SCALE: AS SHOWN | SHOP DRAWING | DATE: 20.11.2024

| REV | DATE | BY | DESCRIPTION | CHK | APD |
|---|---|---|---|---|---|
| A | 20-11-24 | E.SH | ISSUE FOR APPROVAL | A.SH | M.M |

6 October Monorail
Engineering Unit
Valid For Construction

DRAWING TITLE:
6TH OF OCTOBER MONORAIL
**SHOP DRAWING FOR STRADDLE BENT 6OL11-22C2**
**STEEL RAFTER.**
FP1

| Project Code | Rubric | Initiator | Lot | Ref | Number | Revision |
|---|---|---|---|---|---|---|
| 93 | M04 | 07 | ACC | 60L11 | DWG | 90493 | A |

REVIEWED WITH COMMENT
MONORAILS PROJECT

-Drawing shall be updated according to the comments on the GA drawing.
-Approval is subject to approval of coordination package between multi-disciplines.

All holes are 22mm U.N.O Length & Area & Weight per piece

| Mark | Profile | Grade | QTY | Length | Area | Weight |
|---|---|---|---|---|---|---|
| FP2 | FLT25*600 | S355J2N | 5 | 1500.0 | 1.06 | 92.5 |

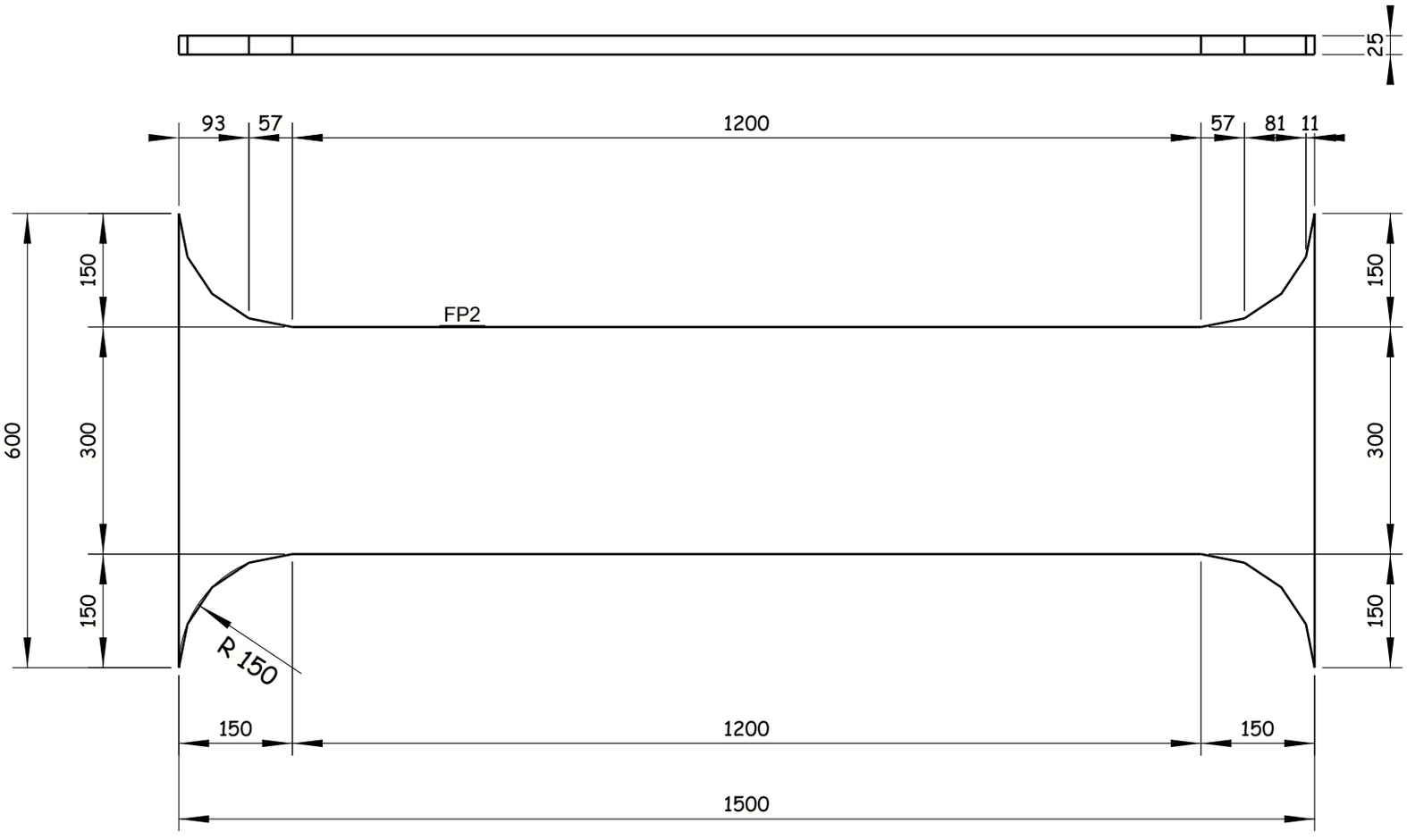


5 Nos. REQUIRED AS DRAWN E.SHFP2

6 October Monorail
Engineering Unit
Valid For Construction

GENERAL NOTES:

1. ALL DIMENSIONS ARE IN MILLIMETERS UNLESS OTHERWISE SPECIFIED.
2. LEVELS ARE IN METERS
3. DESIGN SERVICE LIFE OF 100 YEARS.
4. FLANGES OF TOP AND BOTTOM CHORDS TO BE SUPPLIED WITH IMPROVED THROUGH THICKNESS PROPERTIES Z25 ACCORDING TO EN10164.

REFERENCE DRAWINGS

| | |
|---|---|
| 1 | 93M-BOA-NAT-LOT-26612 |
| 2 | |
| 3 | |
| 4 | |
| 5 | |
| 6 | |
| 7 | |
| 8 | |
| 9 | |
| 10 | |
| 11 | |

6TH OF OCTOBER CITY RAIL TRANSIT MONORAIL &
NEW CAPITAL CITY RAIL TRANSIT MONORAIL

The Authority — Hill International Authority Consultant — ORASCOM CONSTRUCTION — BOMBARDIER — Main Contractor — SENER — SHAKER CONSULTANCY GROUP — Designer

CONTRACTOR / CONSULTANT:
ENGINEERING HOUSE FOR CONSULTANCY

SCALE: AS SHOWN | CHD DRAWING | DATE: 20.11.2024

DRAWING TITLE:
6TH OF OCTOBER MONORAIL
SHOP DRAWING FOR STRADDLE BENT 6OL11-22C2
STEEL RAFTER.
FP2

| REV. | DATE | BY | DESCRIPTION | CHK | APD |
|---|---|---|---|---|---|
| A | 20-11-24 | E.SH | ISSUE FOR APPROVAL | A.SH | M.M |

| Project Code | Rubric | Initiator | Lot | Ref | Number | Revision |
|---|---|---|---|---|---|---|
| 93M | 0407 | ACC | 60L11 | DWG | 90494 | A |

Tekla Structures

REVIEWED WITH COMMENT
MONORAILS PROJECT

-Drawing shall be updated according to the comments on the GA drawing.
-Approval is subject to approval of coordination package between multi-disciplines.

All holes are 22mm U.N.O Length & Area & Weight per piece

| Mark | Profile | Grade | QTY | Length | Area | Weight |
|---|---|---|---|---|---|---|
| FP3 | PL50*2800 | S355K2N | 1 | 10714.0 | 33.86 | 6137.0 |

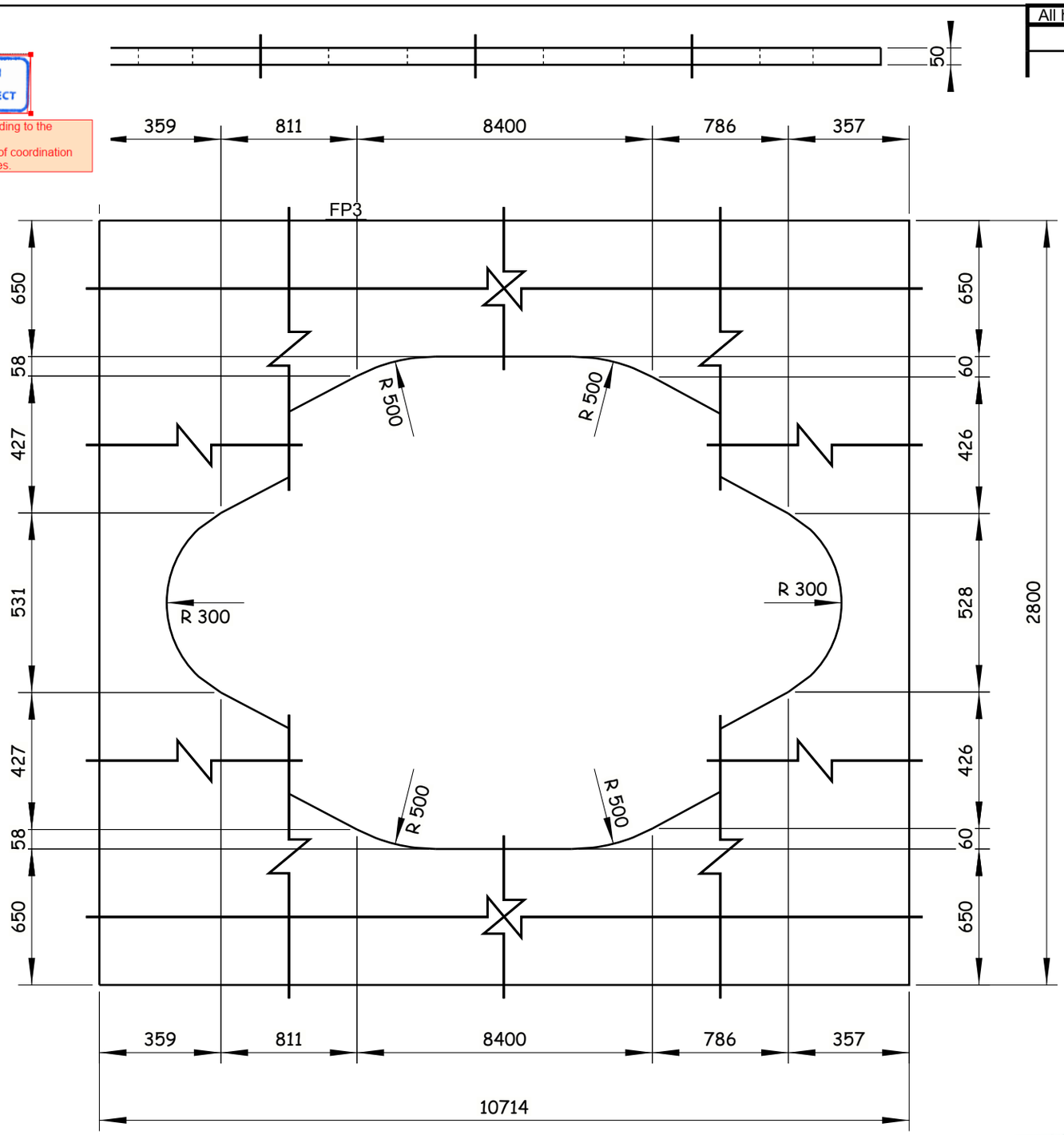


1 Nos. REQUIRED AS DRAWN E.SHFP3

Tekla Structures

GENERAL NOTES:

1. ALL DIMENSIONS ARE IN MILLIMETERS UNLESS OTHERWISE SPECIFIED.
2. LEVELS ARE IN METERS
3. DESIGN SERVICE LIFE OF 100 YEARS.
4. FLANGES OF TOP AND BOTTOM CHORDS TO BE SUPPLIED WITH IMPROVED THROUGH THICKNESS PROPERTIES Z25 ACCORDING TO EN10164.

REFERENCE DRAWINGS

| | |
|---|---|
| 1 | 93M-BOA-NAT-LOT-26612 |
| 2 | |
| 3 | |
| 4 | |
| 5 | |
| 6 | |
| 7 | |
| 8 | |
| 9 | |
| 10 | |
| 11 | |

6TH OF OCTOBER CITY RAIL TRANSIT MONORAIL &
NEW CAPITAL CITY RAIL TRANSIT MONORAIL

The Authority — Hill International — Authority Consultant
Main Contractor
Designer

CONTRACTOR & CONSULTANT:
ENGINEERING HOUSE FOR CONSULTANCY

SCALE: AS SHOWN | SHD DRAWING | DATE: 20.11.2024

6 October Monorail
Engineering Unit
Valid For Construction

DRAWING TITLE:
6TH OF OCTOBER MONORAIL
SHOP DRAWING FOR STRADDLE BENT 6OL11-22C2
STEEL RAFTER.
FP3

| REV | DATE | BY | DESCRIPTION | CHK | APD |
|---|---|---|---|---|---|
| A | 20-11-24 | E.SH | ISSUE FOR APPROVAL | A.SH | M.M |

| Project Code | Rubric | Initiator | Lot | Ref | Number | Revision |
|---|---|---|---|---|---|---|
| 93M | 0407 | ACC | 60L11 | DWG | 90495 | A |

REVIEWED WITH COMMENT
MONORAILS PROJECT

-Drawing shall be updated according to the comments on the GA drawing.
-Approval is subject to approval of coordination package between multi-disciplines.

All holes are 22mm U.N.O Length & Area & Weight per piece

| Mark | Profile | Grade | QTY | Length | Area | Weight |
|---|---|---|---|---|---|---|
| FP4 | FLT15*150 | S355J2N | 6 | 1680.0 | 0.56 | 29.5 |

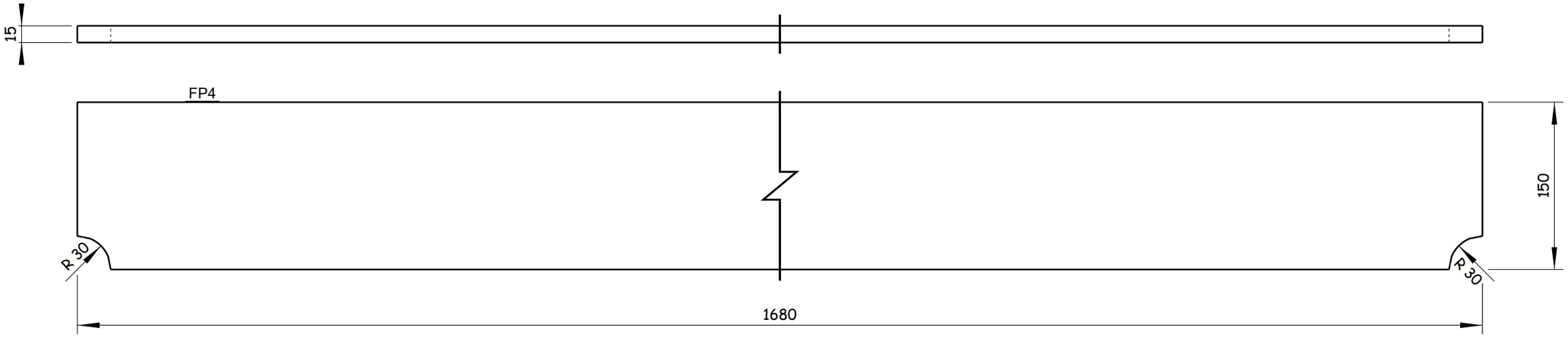


6 Nos. REQUIRED AS DRAWN E.SHFP4

GENERAL NOTES:

1. ALL DIMENSIONS ARE IN MILLIMETERS UNLESS OTHERWISE SPECIFIED.
2. LEVELS ARE IN METERS
3. DESIGN SERVICE LIFE OF 100 YEARS.
4. FLANGES OF TOP AND BOTTOM CHORDS TO BE SUPPLIED WITH IMPROVED THROUGH THICKNESS PROPERTIES Z25 ACCORDING TO EN10164.

REFERENCE DRAWINGS

| | |
|---|---|
| 1 | 93M-BOA-NAT-LOT-26612 |
| 2 | |
| 3 | |
| 4 | |
| 5 | |
| 6 | |
| 7 | |
| 8 | |
| 9 | |
| 10 | |
| 11 | |

6TH OF OCTOBER CITY RAIL TRANSIT MONORAIL &
NEW CAPITAL CITY RAIL TRANSIT MONORAIL

وزارة النقل MINISTRY OF TRANSPORT
The Authority
Hill International
Authority Consultant

ORASCOM CONSTRUCTION
Main Contractor

BOMBARDIER
SENER
SHAKER CONSULTANCY GROUP
Designer

CONTRACTOR & CONSULTANT:
ENGINEERING HOUSE FOR CONSULTANCY

6 October Monorail
Engineering Unit
Valid For Construction

SCALE: AS SHOWN
CHK'D DRAWING
DATE: 20.11.2024

| REV | DATE | BY | DESCRIPTION | CHK | APD |
|---|---|---|---|---|---|
| A | 20-11-24 | E.SH | ISSUE FOR APPROVAL | A.SH | M.M |

DRAWING TITLE:
6TH OF OCTOBER MONORAIL
**SHOP DRAWING FOR STRADDLE BENT 6OL11-22C2**
**STEEL RAFTER.**
FP4

| Project Code | Rubric | Initiator | Lot | Ref | Number | Revision |
|---|---|---|---|---|---|---|
| 93M | 04 07 | ACC | 60 L11 | DWG | 90496 | A |

Tekla Structures

REVIEWED WITH COMMENT
MONORAILS PROJECT

-Drawing shall be updated according to the comments on the GA drawing.
-Approval is subject to approval of coordination package between multi-disciplines.

All holes are 22mm U.N.O Length & Area & Weight per piece

| Mark | Profile | Grade | QTY | Length | Area | Weight |
|---|---|---|---|---|---|---|
| FP5 | FLT25*350 | S355J2N | 4 | 145.0 | 0.10 | 7.4 |

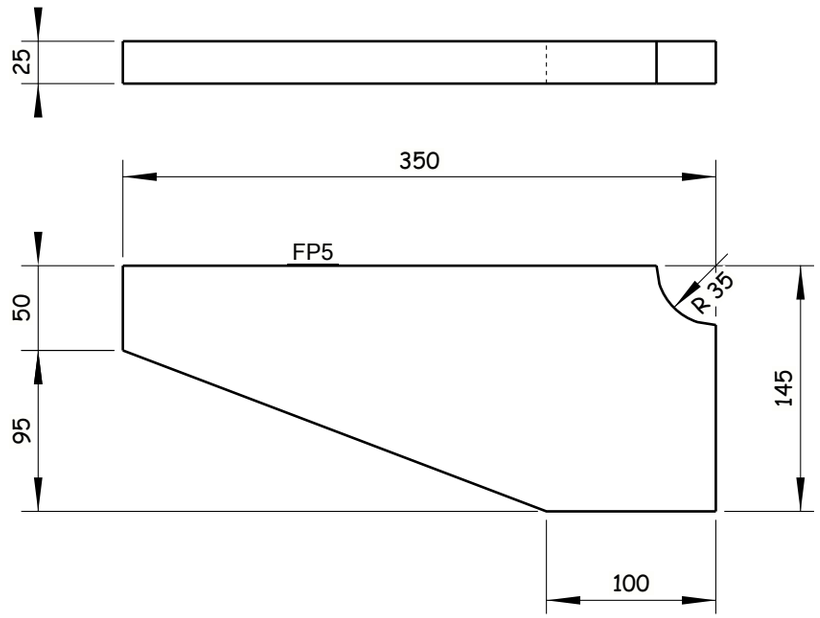


4 Nos. REQUIRED AS DRAWN E.SHFP5

Tekla Structures

GENERAL NOTES:

1. ALL DIMENSIONS ARE IN MILLIMETERS UNLESS OTHERWISE SPECIFIED.
2. LEVELS ARE IN METERS
3. DESIGN SERVICE LIFE OF 100 YEARS.
4. FLANGES OF TOP AND BOTTOM CHORDS TO BE SUPPLIED WITH IMPROVED THROUGH THICKNESS PROPERTIES Z25 ACCORDING TO EN10164.

REFERENCE DRAWINGS

| | |
|---|---|
| 1 | 93M-BOA-NAT-LOT-26612 |
| 2 | |
| 3 | |
| 4 | |
| 5 | |
| 6 | |
| 7 | |
| 8 | |
| 9 | |
| 10 | |
| 11 | |

6TH OF OCTOBER CITY RAIL TRANSIT MONORAIL &
NEW CAPITAL CITY RAIL TRANSIT MONORAIL

The Authority
Hill International
Authority Consultant

ORASCOM CONSTRUCTION
BOMBARDIER
Main Contractor

SENER
SHAKER CONSULTANCY GROUP
Designer

CONTRACTOR & CONSULTANT:
ENGINEERING HOUSE FOR CONSULTANCY

6 October Monorail
Engineering Unit
Valid For Construction

SCALE: AS SHOWN | CHD DRAWING | DATE: 20.11.2024

| REV | DATE | BY | DESCRIPTION | CHK | APD |
|---|---|---|---|---|---|
| A | 20-11-24 | E.SH | ISSUE FOR APPROVAL | A.SH | M.M |

DRAWING TITLE:
6TH OF OCTOBER MONORAIL
**SHOP DRAWING FOR STRADDLE BENT 6OL11-22C2**
**STEEL RAFTER.**
FP5

| Project Code | Rubric | Initiator | Lot | Ref | Number | Revision |
|---|---|---|---|---|---|---|
| 93M | 04 07 | ACC | 60 L11 | DWG | 90497 | A |

REVIEWED WITH COMMENT
MONORAILS PROJECT

-Drawing shall be updated according to the comments on the GA drawing.
-Approval is subject to approval of coordination package between multi-disciplines.

| All holes are 22mm U.N.O Length & Area & Weight per piece | | | | | | |
|---|---|---|---|---|---|---|
| FP6 | PL25*2240.6 | S355J2N | 2 | 2800.0 | 12.80 | 1231.2 |
| Mark | Profile | Grade | QTY | Length | Area | Weight |

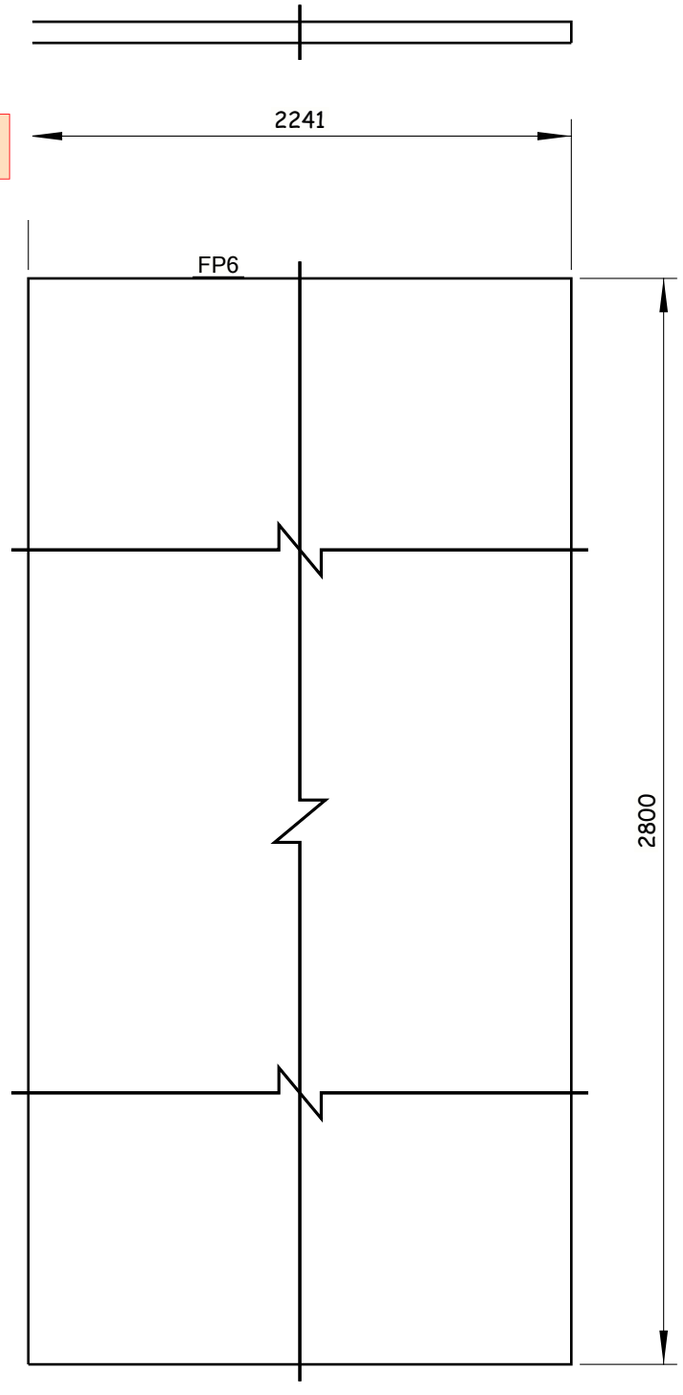


2 Nos. REQUIRED AS DRAWN E.SHFP6

Tekla Structures

GENERAL NOTES:

1. ALL DIMENSIONS ARE IN MILLIMETERS UNLESS OTHERWISE SPECIFIED.
2. LEVELS ARE IN METERS
3. DESIGN SERVICE LIFE OF 100 YEARS.
4. FLANGES OF TOP AND BOTTOM CHORDS TO BE SUPPLIED WITH IMPROVED THROUGH THICKNESS PROPERTIES Z25 ACCORDING TO EN10164.

REFERENCE DRAWINGS

| | |
|---|---|
| 1 | 93M-BOA-NAT-LOT-26612 |
| 2 | |
| 3 | |
| 4 | |
| 5 | |
| 6 | |
| 7 | |
| 8 | |
| 9 | |
| 10 | |
| 11 | |

6TH OF OCTOBER CITY RAIL TRANSIT MONORAIL &
NEW CAPITAL CITY RAIL TRANSIT MONORAIL

The Authority
Hill International
Authority Consultant

ORASCOM CONSTRUCTION
Main Contractor

BOMBARDIER
SENER
SHAKER CONSULTANCY GROUP
Designer

CONTRACTOR / CONSULTANT:
ENGINEERING HOUSE FOR CONSULTANCY

6 October Monorail
Engineering Unit
Valid For Construction

| SCALE | SHOP DRAWING | DATE |
|---|---|---|
| AS SHOWN | | 20.11.2024 |

DRAWING TITLE:
6TH OF OCTOBER MONORAIL
**SHOP DRAWING FOR STRADDLE BENT 6OL11-22C2 STEEL RAFTER.**
FP6

| REV | DATE | BY | DESCRIPTION | CHK | APD |
|---|---|---|---|---|---|
| A | 20-11-24 | E.SH | ISSUE FOR APPROVAL | A.SH | M.M |

| Project Code | Rubric | Initiator | Lot | Ref | Number | Revision |
|---|---|---|---|---|---|---|
| 93 | M04 | 07 | ACC | 60L11 | DWG | 90498 | A |

REVIEWED WITH COMMENT
MONORAILS PROJECT

-Drawing shall be updated according to the comments on the GA drawing.
-Approval is subject to approval of coordination package between multi-disciplines.

| All holes are 22mm U.N.O Length & Area & Weight per piece | | | | | | |
|---|---|---|---|---|---|---|
| FP7 | PL25*2800 | S355J2N | 1 | 3992.5 | 22.70 | 2193.9 |
| Mark | Profile | Grade | QTY | Length | Area | Weight |

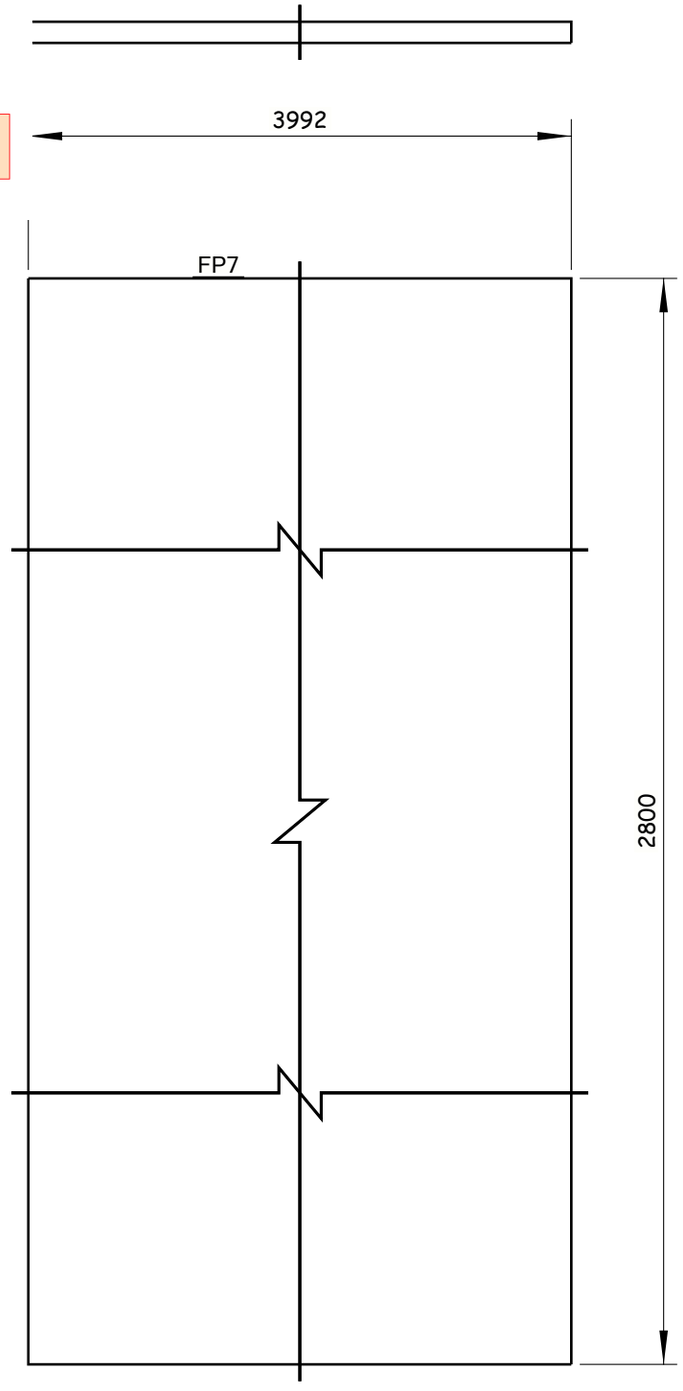


1 Nos. REQUIRED AS DRAWN E.SHFP7

Tekla Structures

GENERAL NOTES:

1. ALL DIMENSIONS ARE IN MILLIMETERS UNLESS OTHERWISE SPECIFIED.
2. LEVELS ARE IN METERS
3. DESIGN SERVICE LIFE OF 100 YEARS.
4. FLANGES OF TOP AND BOTTOM CHORDS TO BE SUPPLIED WITH IMPROVED THROUGH THICKNESS PROPERTIES Z25 ACCORDING TO EN10164.

REFERENCE DRAWINGS

| | |
|---|---|
| 1 | 93M-BOA-NAT-LOT-26612 |
| 2 | |
| 3 | |
| 4 | |
| 5 | |
| 6 | |
| 7 | |
| 8 | |
| 9 | |
| 10 | |
| 11 | |

6TH OF OCTOBER CITY RAIL TRANSIT MONORAIL &
NEW CAPITAL CITY RAIL TRANSIT MONORAIL

The Authority | Hill International Authority Consultant | Main Contractor | Designer

CONTRACTOR / CONSULTANT: ENGINEERING HOUSE FOR CONSULTANCY

6 October Monorail Engineering Unit
Valid For Construction

SCALE: AS SHOWN | SHOP DRAWING | DATE: 20.11.2024

DRAWING TITLE:
6TH OF OCTOBER MONORAIL
**SHOP DRAWING FOR STRADDLE BENT 6OL11-22C2 STEEL RAFTER.**
FP7

| REV | DATE | BY | DESCRIPTION | CHK | APD |
|---|---|---|---|---|---|
| A | 20-11-24 | E.SH | ISSUE FOR APPROVAL | A.SH | M.M |

| Project Code | Rubric | Initiator | Lot | Ref | Number | Revision |
|---|---|---|---|---|---|---|
| 93 | M0407 | ACC | 60L11 | DWG | 90499 | A |

REVIEWED WITH COMMENT
MONORAILS PROJECT

-Drawing shall be updated according to the comments on the GA drawing.
-Approval is subject to approval of coordination package between multi-disciplines.

| All holes are 22mm U.N.O Length & Area & Weight per piece | | | | | | |
|---|---|---|---|---|---|---|
| FP8 | PL25*2800 | S355J2N | 1 | 11285.5 | 63.90 | 6201.4 |
| Mark | Profile | Grade | QTY | Length | Area | Weight |

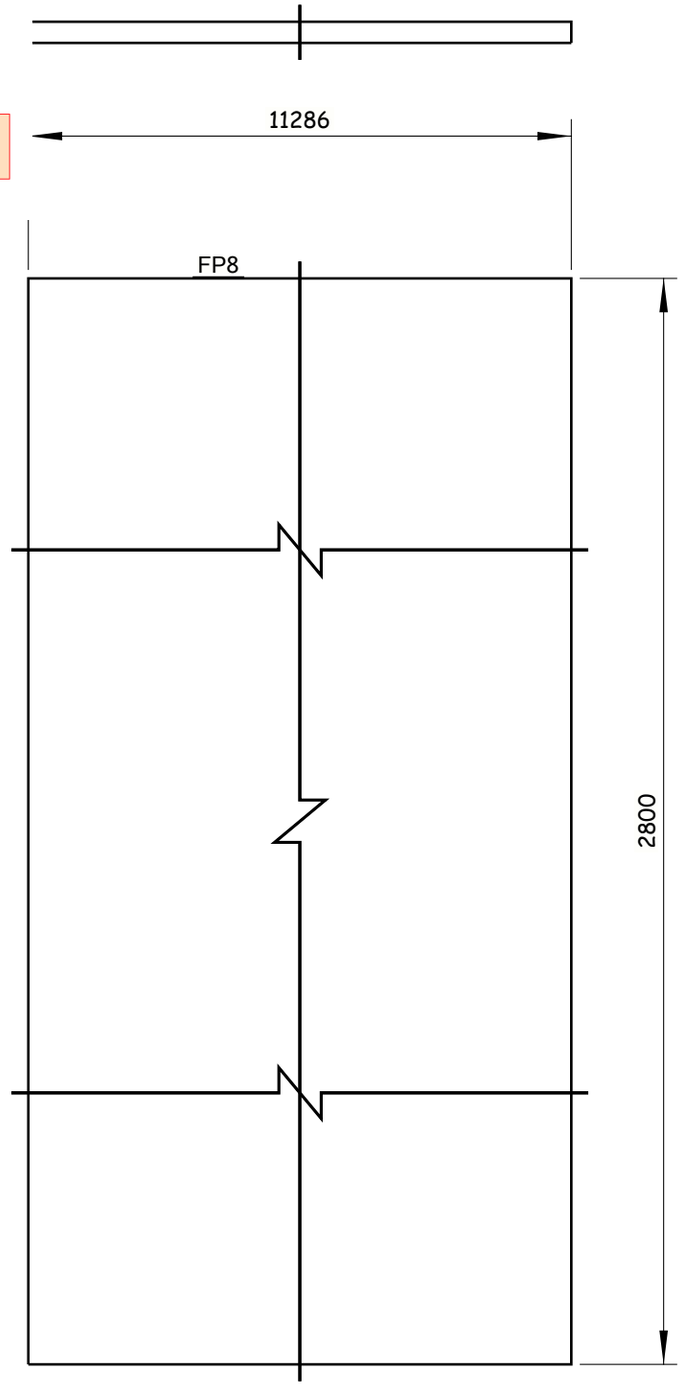


1 Nos. REQUIRED AS DRAWN E.SHFP8

Tekla Structures

GENERAL NOTES:

1. ALL DIMENSIONS ARE IN MILLIMETERS UNLESS OTHERWISE SPECIFIED.
2. LEVELS ARE IN METERS
3. DESIGN SERVICE LIFE OF 100 YEARS.
4. FLANGES OF TOP AND BOTTOM CHORDS TO BE SUPPLIED WITH IMPROVED THROUGH THICKNESS PROPERTIES Z25 ACCORDING TO EN10164.

REFERENCE DRAWINGS

| | |
|---|---|
| 1 | 93M-BOA-NAT-LOT-26612 |
| 2 | |
| 3 | |
| 4 | |
| 5 | |
| 6 | |
| 7 | |
| 8 | |
| 9 | |
| 10 | |
| 11 | |

6TH OF OCTOBER CITY RAIL TRANSIT MONORAIL &
NEW CAPITAL CITY RAIL TRANSIT MONORAIL

The Authority
Hill International
Authority Consultant

Main Contractor

Designer

CONTRACTOR
CONSULTANT:

ENGINEERING HOUSE FOR CONSULTANCY

6 October Monorail
Engineering Unit
Valid For Construction

SCALE: AS SHOWN | SHOP DRAWING | DATE: 20.11.2024

DRAWING TITLE:
6TH OF OCTOBER MONORAIL
**SHOP DRAWING FOR STRADDLE BENT 6OL11-22C2 STEEL RAFTER.**
FP8

| REV | DATE | BY | DESCRIPTION | CHK | APD |
|---|---|---|---|---|---|
| A | 20-11-24 | E.SH | ISSUE FOR APPROVAL | A.SH | M.M |

| Project Code | Rubric | Initiator | Lot | Ref | Number | Revision |
|---|---|---|---|---|---|---|
| 93 | M0407 | ACC | 60L11 | DWG | 90500 | A |

REVIEWED WITH COMMENT
MONORAILS PROJECT

-Drawing shall be updated according to the comments on the GA drawing.
-Approval is subject to approval of coordination package between multi-disciplines.

All holes are 22mm U.N.O Length & Area & Weight per piece

| Mark | Profile | Grade | QTY | Length | Area | Weight |
|---|---|---|---|---|---|---|
| FP9 | PL25*2360 | S355J2N | 1 | 5937.9 | 28.39 | 2745.2 |

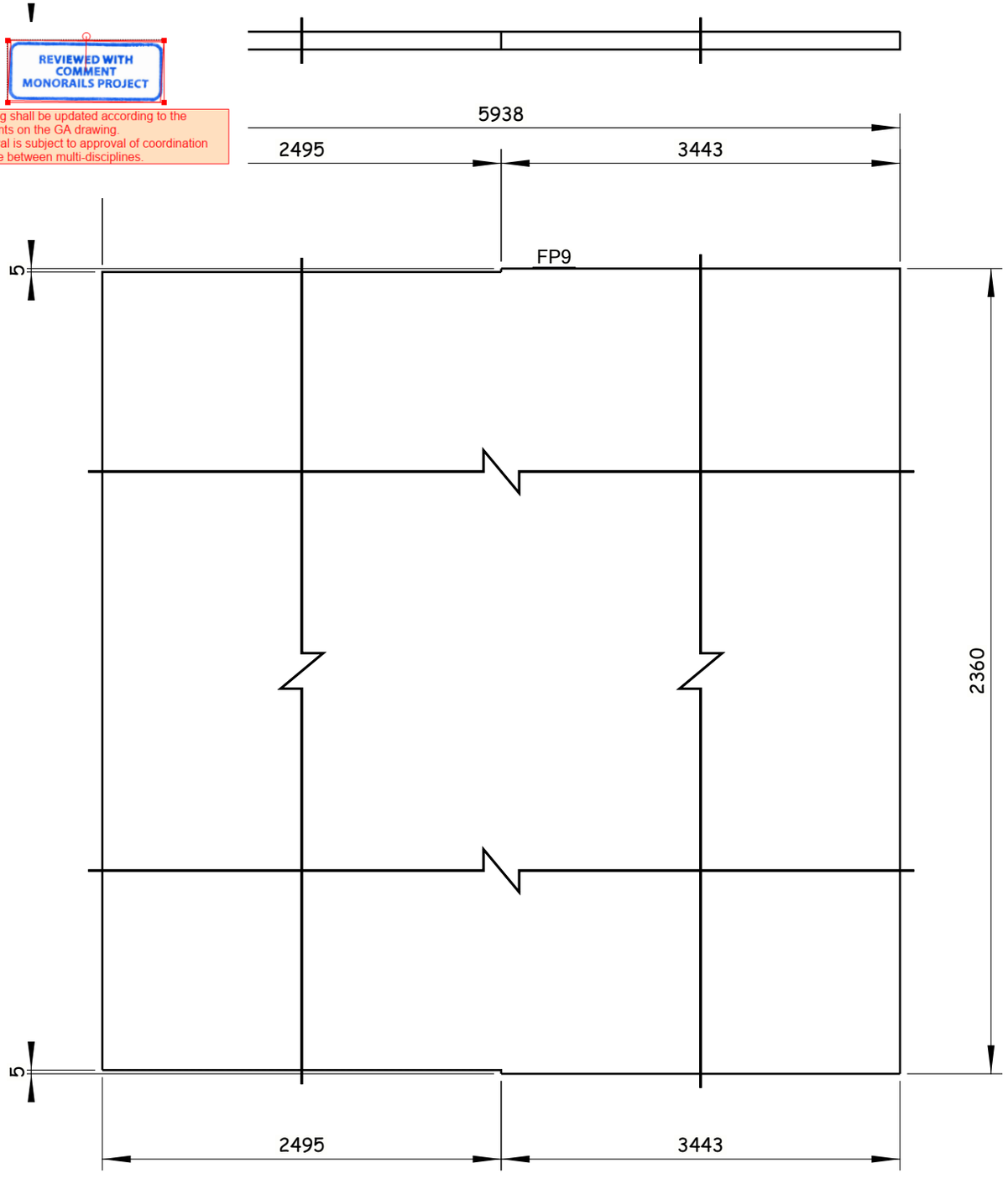


1 Nos. REQUIRED AS DRAWN E.SHFP9

Tekla Structures

GENERAL NOTES:

1. ALL DIMENSIONS ARE IN MILLIMETERS UNLESS OTHERWISE SPECIFIED.
2. LEVELS ARE IN METERS
3. DESIGN SERVICE LIFE OF 100 YEARS.
4. FLANGES OF TOP AND BOTTOM CHORDS TO BE SUPPLIED WITH IMPROVED THROUGH THICKNESS PROPERTIES Z25 ACCORDING TO EN10164.

REFERENCE DRAWINGS

| | |
|---|---|
| 1 | 93M-BOA-NAT-LOT-26612 |
| 2 | |
| 3 | |
| 4 | |
| 5 | |
| 6 | |
| 7 | |
| 8 | |
| 9 | |
| 10 | |
| 11 | |

6TH OF OCTOBER CITY RAIL TRANSIT MONORAIL &
NEW CAPITAL CITY RAIL TRANSIT MONORAIL

The Authority
Hill International
Authority Consultant

Main Contractor

Designer

CONTRACTOR / CONSULTANT:
ENGINEERING HOUSE FOR CONSULTANCY

SCALE: AS SHOWN | CHK'D DRAWING | DATE: 20.11.2024

| REV | DATE | BY | DESCRIPTION | CHK | APD |
|---|---|---|---|---|---|
| A | 20-11-24 | E.SH | ISSUE FOR APPROVAL | A.SH | M.M |

6 October Monorail
Engineering Unit
Valid For Construction

DRAWING TITLE:
6TH OF OCTOBER MONORAIL
**SHOP DRAWING FOR STRADDLE BENT 6OL11-22C2**
**STEEL RAFTER.**
FP9

| Project Code | Rubric | Initiator | Lot | Ref | Number | Revision |
|---|---|---|---|---|---|---|
| 93 | M04 | 07 | ACC | 60 | L11 | DWG | 90501 | A |

REVIEWED WITH COMMENT
MONORAILS PROJECT

-Drawing shall be updated according to the comments on the GA drawing.
-Approval is subject to approval of coordination package between multi-disciplines.

| All holes are 22mm U.N.O Length & Area & Weight per piece | | | | | | |
|---|---|---|---|---|---|---|
| FP10 | PL25*2360 | S355J2N | 2 | 12000.0 | 57.36 | 5557.8 |
| Mark | Profile | Grade | QTY | Length | Area | Weight |

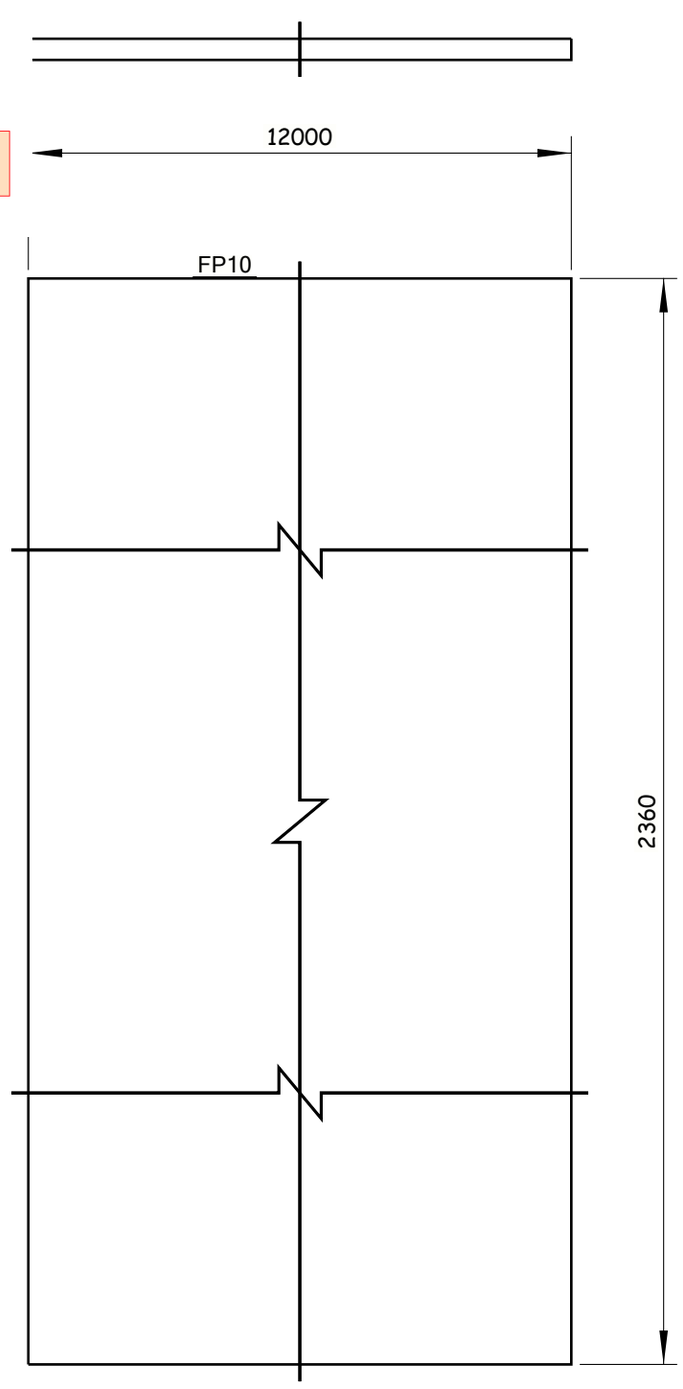


2 Nos. REQUIRED AS DRAWN E.SHFP10

Tekla Structures

GENERAL NOTES:

1. ALL DIMENSIONS ARE IN MILLIMETERS UNLESS OTHERWISE SPECIFIED.
2. LEVELS ARE IN METERS
3. DESIGN SERVICE LIFE OF 100 YEARS.
4. FLANGES OF TOP AND BOTTOM CHORDS TO BE SUPPLIED WITH IMPROVED THROUGH THICKNESS PROPERTIES Z25 ACCORDING TO EN10164.

REFERENCE DRAWINGS

| | |
|---|---|
| 1 | 93M-BOA-NAT-LOT-26612 |
| 2 | |
| 3 | |
| 4 | |
| 5 | |
| 6 | |
| 7 | |
| 8 | |
| 9 | |
| 10 | |
| 11 | |

6TH OF OCTOBER CITY RAIL TRANSIT MONORAIL &
NEW CAPITAL CITY RAIL TRANSIT MONORAIL

The Authority — Hill International Authority Consultant

ORASCOM CONSTRUCTION — Main Contractor

BOMBARDIER — SENER — SHAKER CONSULTANCY GROUP — Designer

CONTRACTOR / CONSULTANT:
ENGINEERING HOUSE FOR CONSULTANCY

6 October Monorail
Engineering Unit
Valid For Construction

| SCALE | CHK'D DRAWING | DATE |
|---|---|---|
| AS SHOWN | | 20.11.2024 |

| REV | DATE | BY | DESCRIPTION | CHK | APD |
|---|---|---|---|---|---|
| A | 20-11-24 | E.SH | ISSUE FOR APPROVAL | A.SH | M.M |

DRAWING TITLE:
6TH OF OCTOBER MONORAIL
**SHOP DRAWING FOR STRADDLE BENT 6OL11-22C2**
**STEEL RAFTER.**
FP10

| Project Code | Rubric | Initiator | Lot | Ref | Number | Revision |
|---|---|---|---|---|---|---|
| 93M | 04 07 | ACC | 60L11 | DWG | 90502 | A |

REVIEWED WITH COMMENT
MONORAILS PROJECT

-Drawing shall be updated according to the comments on the GA drawing.
-Approval is subject to approval of coordination package between multi-disciplines.

All holes are 22mm U.N.O Length & Area & Weight per piece

| Mark | Profile | Grade | QTY | Length | Area | Weight |
|---|---|---|---|---|---|---|
| FP11 | PL25*2360 | S355J2N | 1 | 12000.0 | 57.31 | 5552.9 |

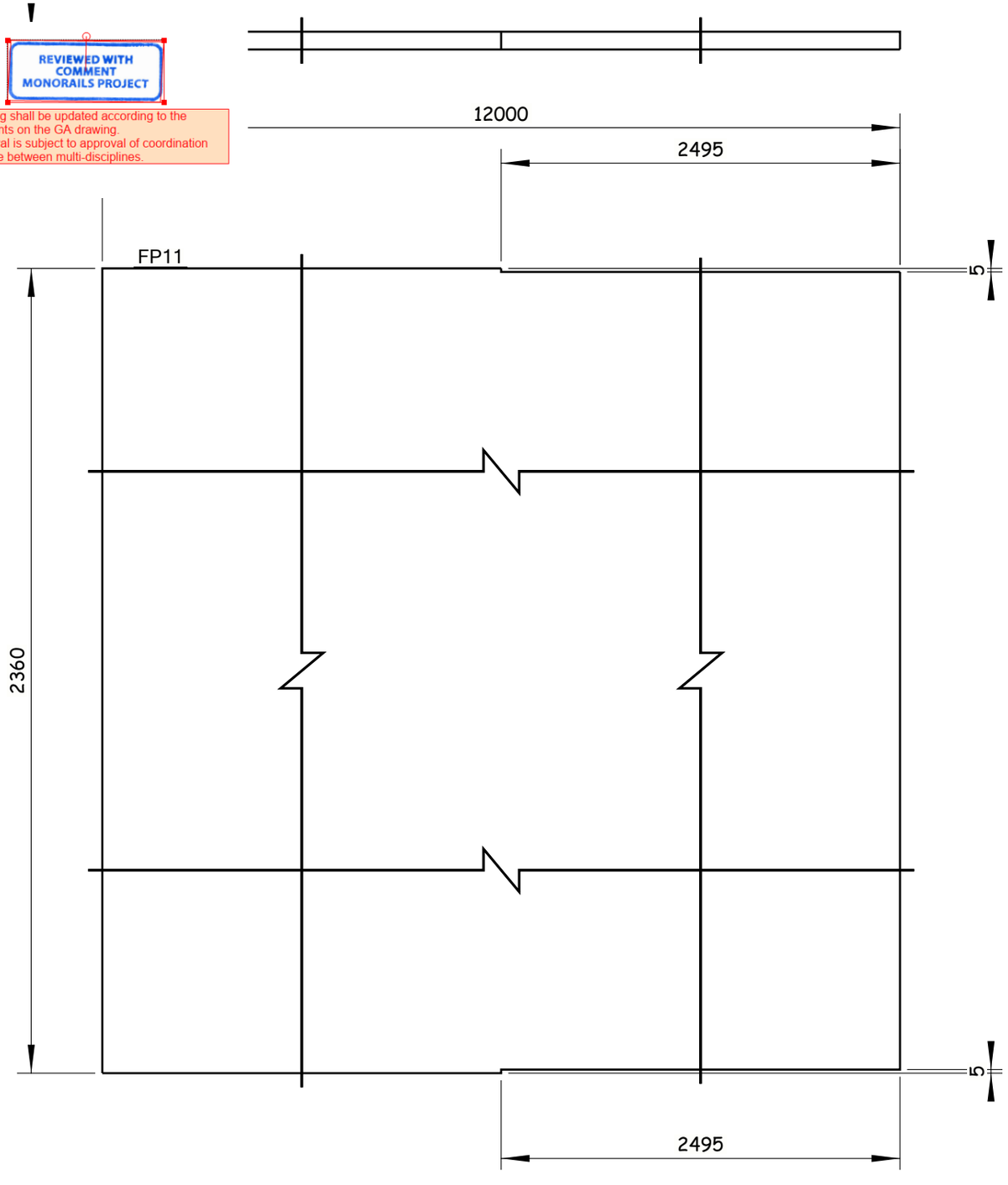


1 Nos. REQUIRED AS DRAWN E.SHFP11

Tekla Structures

GENERAL NOTES:

1. ALL DIMENSIONS ARE IN MILLIMETERS UNLESS OTHERWISE SPECIFIED.
2. LEVELS ARE IN METERS
3. DESIGN SERVICE LIFE OF 100 YEARS.
4. FLANGES OF TOP AND BOTTOM CHORDS TO BE SUPPLIED WITH IMPROVED THROUGH THICKNESS PROPERTIES Z25 ACCORDING TO EN10164.

REFERENCE DRAWINGS

| | |
|---|---|
| 1 | 93M-BOA-NAT-LOT-26612 |
| 2 | |
| 3 | |
| 4 | |
| 5 | |
| 6 | |
| 7 | |
| 8 | |
| 9 | |
| 10 | |
| 11 | |

6TH OF OCTOBER CITY RAIL TRANSIT MONORAIL &
NEW CAPITAL CITY RAIL TRANSIT MONORAIL

The Authority
Hill International
Authority Consultant

Main Contractor

Designer

CONTRACTOR / CONSULTANT:
ENGINEERING HOUSE FOR CONSULTANCY

SCALE: AS SHOWN | CHK'D DRAWING | DATE: 20.11.2024

| REV | DATE | BY | DESCRIPTION | CHK | APD |
|---|---|---|---|---|---|
| A | 20-11-24 | E.SH | ISSUE FOR APPROVAL | A.SH | M.M |

6 October Monorail
Engineering Unit
Valid For Construction

DRAWING TITLE:
6TH OF OCTOBER MONORAIL
**SHOP DRAWING FOR STRADDLE BENT 6OL11-22C2**
**STEEL RAFTER.**
FP11

| Project Code | Rubric | Initiator | Lot | Ref | Number | Revision |
|---|---|---|---|---|---|---|
| 93M | 04 07 | ACC | 60 L11 | DWG | 90503 | A |

REVIEWED WITH COMMENT
MONORAILS PROJECT

-Drawing shall be updated according to the comments on the GA drawing.
-Approval is subject to approval of coordination package between multi-disciplines.

All holes are 22mm U.N.O Length & Area & Weight per piece

| Mark | Profile | Grade | QTY | Length | Area | Weight |
|---|---|---|---|---|---|---|
| N3 | PD72*18 | S355J2N | 240 | 36.0 | 0.01 | 0.8 |

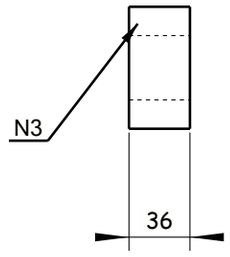


240 Nos. REQUIRED AS DRAWN E.SHN3

Tekla Structures

GENERAL NOTES:

1. ALL DIMENSIONS ARE IN MILLIMETERS UNLESS OTHERWISE SPECIFIED.
2. LEVELS ARE IN METERS
3. DESIGN SERVICE LIFE OF 100 YEARS.
4. FLANGES OF TOP AND BOTTOM CHORDS TO BE SUPPLIED WITH IMPROVED THROUGH THICKNESS PROPERTIES Z25 ACCORDING TO EN10164.

REFERENCE DRAWINGS

| | |
|---|---|
| 1 | 93M-BOA-NAT-LOT-26612 |
| 2 | |
| 3 | |
| 4 | |
| 5 | |
| 6 | |
| 7 | |
| 8 | |
| 9 | |
| 10 | |
| 11 | |

6TH OF OCTOBER CITY RAIL TRANSIT MONORAIL &
NEW CAPITAL CITY RAIL TRANSIT MONORAIL

The Authority
Hill International
Authority Consultant

ORASCOM CONSTRUCTION
Main Contractor

BOMBARDIER
SENER
SHAKER CONSULTANCY GROUP
Designer

CONTRACTOR & CONSULTANT:
ENGINEERING HOUSE FOR CONSULTANCY

6 October Monorail
Engineering Unit
Valid For Construction

| SCALE | CHK'D DRAWING | DATE |
|---|---|---|
| AS SHOWN | | 20.11.2024 |

| REV | DATE | BY | DESCRIPTION | CHK | APD |
|---|---|---|---|---|---|
| A | 20-11-24 | E.SH | ISSUE FOR APPROVAL | A.SH | M.M |

DRAWING TITLE:
6TH OF OCTOBER MONORAIL
**SHOP DRAWING FOR STRADDLE BENT 6OL11-22C2**
**STEEL RAFTER.**
N3

| Project Code | Rubric | Initiator | Lot | Ref | Number | Revision |
|---|---|---|---|---|---|---|
| 93M | 04 07 | ACC | 60 L 11 | DWG | 90504 | A |

All holes are 22mm U.N.O  Length & Area & Weight per piece

| Mark | Profile | Grade | QTY | Length | Area | Weight |
|---|---|---|---|---|---|---|
| P1 | PL80*2660 | S355K2N | 2 | 3000.0 | 14.74 | 3969.4 |

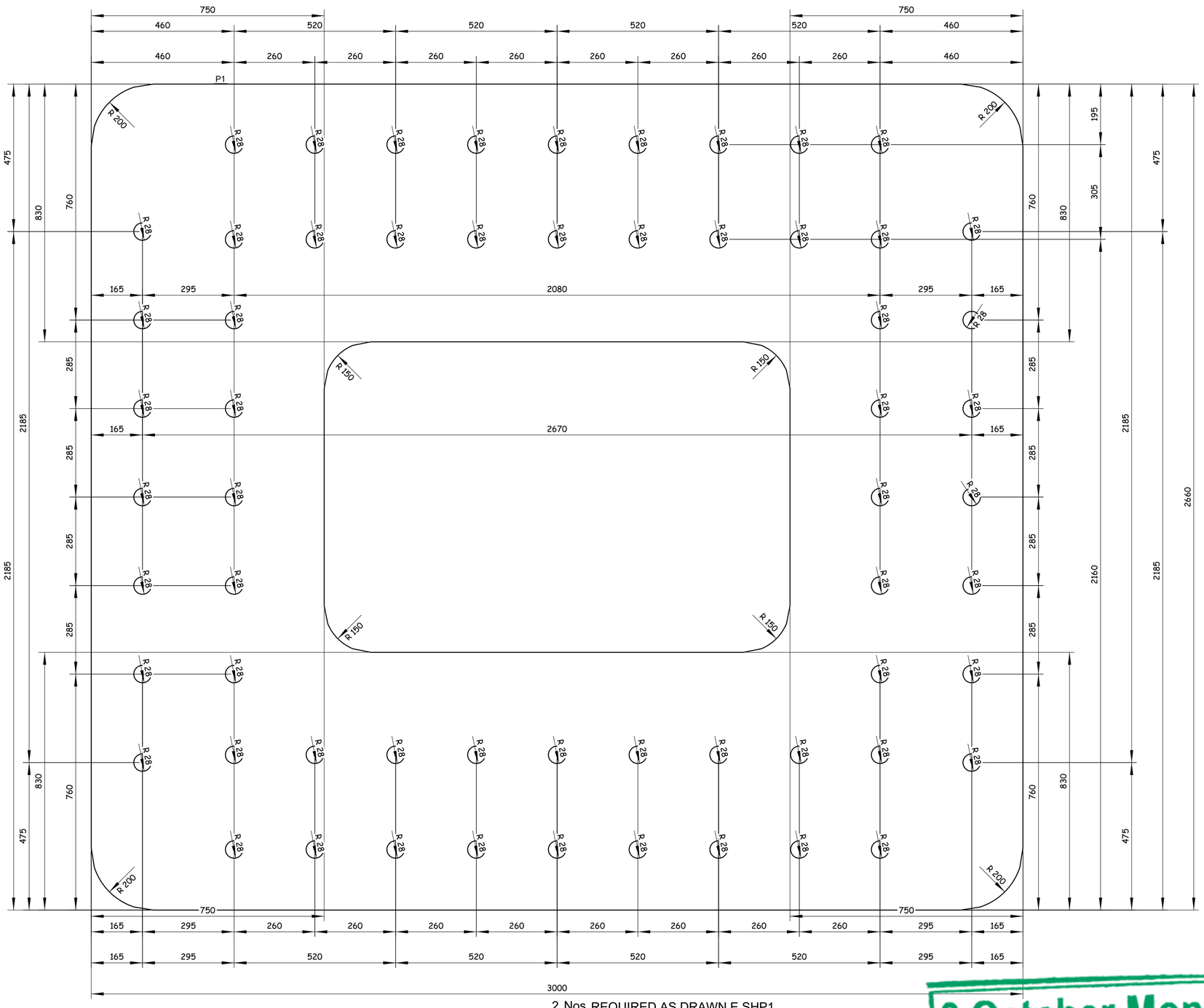


2 Nos. REQUIRED AS DRAWN E.SHP1

REVIEWED WITH COMMENT
MONORAILS PROJECT

-Drawing shall be updated according to the comments on the GA drawing.
-Approval is subject to approval of coordination package between multi-disciplines.

## GENERAL NOTES:

1. ALL DIMENSIONS ARE IN MILLIMETERS UNLESS OTHERWISE SPECIFIED.
2. LEVELS ARE IN METERS
3. DESIGN SERVICE LIFE OF 100 YEARS.
4. FLANGES OF TOP AND BOTTOM CHORDS TO BE SUPPLIED WITH IMPROVED THROUGH THICKNESS PROPERTIES Z25 ACCORDING TO EN10164.

| REFERENCE DRAWINGS | |
|---|---|
| 1 | 93M-BOA-NAT-LOT-26612 |
| 2 | |
| 3 | |
| 4 | |
| 5 | |
| 6 | |
| 7 | |
| 8 | |
| 9 | |
| 10 | |
| 11 | |

6TH OF OCTOBER CITY RAIL TRANSIT MONORAIL &
NEW CAPITAL CITY RAIL TRANSIT MONORAIL

The Authority
Hill International
Authority Consultant

Main Contractor

Designer

CONTRACTOR
CONSULTANT:
ENGINEERING HOUSE FOR CONSULTANCY

| REV | DATE | BY | DESCRIPTION | CHK | APD |
|---|---|---|---|---|---|
| A | 20-11-24 | E.SH | ISSUE FOR APPROVAL | A.SH | M.M |

SCALE: AS SHOWN
SHOP DRAWING
DATE: 20.11.2024

6 October Monorail
Engineering Unit
Valid For Construction

DRAWING TITLE:
6TH OF OCTOBER MONORAIL
**SHOP DRAWING FOR STRADDLE BENT 6OL11-22C2 STEEL RAFTER.**
P1

| Project Code | Rubric | Initiator | Lot | Ref | Number | Revision |
|---|---|---|---|---|---|---|
| 9 3 M | 0 4 0 7 | A C C | 6 0 L 1 1 | D W G | 90505 | A |

Tekla Structures

REVIEWED WITH COMMENT
MONORAILS PROJECT

-Drawing shall be updated according to the comments on the GA drawing.
-Approval is subject to approval of coordination package between multi-disciplines.

All holes are 22mm U.N.O  Length & Area & Weight per piece

| Mark | Profile | Grade | QTY | Length | Area | Weight |
|---|---|---|---|---|---|---|
| PL1 | FLT20*350 | S355J2N | 84 | 145.0 | 0.09 | 6.0 |

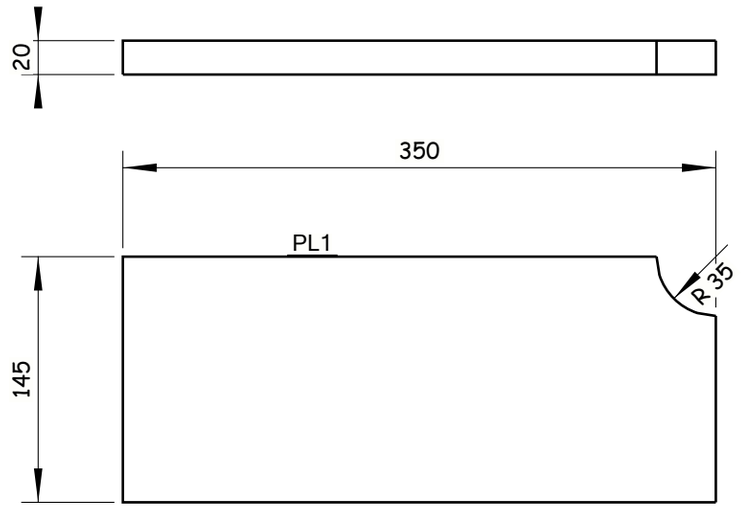


84 Nos. REQUIRED AS DRAWN E.SHPL1

Tekla Structures

GENERAL NOTES:

1. ALL DIMENSIONS ARE IN MILLIMETERS UNLESS OTHERWISE SPECIFIED.
2. LEVELS ARE IN METERS
3. DESIGN SERVICE LIFE OF 100 YEARS.
4. FLANGES OF TOP AND BOTTOM CHORDS TO BE SUPPLIED WITH IMPROVED THROUGH THICKNESS PROPERTIES Z25 ACCORDING TO EN10164.

REFERENCE DRAWINGS

| | |
|---|---|
| 1 | 93M-BOA-NAT-LOT-26612 |
| 2 | |
| 3 | |
| 4 | |
| 5 | |
| 6 | |
| 7 | |
| 8 | |
| 9 | |
| 10 | |
| 11 | |

6TH OF OCTOBER CITY RAIL TRANSIT MONORAIL &
NEW CAPITAL CITY RAIL TRANSIT MONORAIL

The Authority
Hill International
Authority Consultant

ORASCOM CONSTRUCTION
BOMBARDIER
Main Contractor

SENER
SHAKER CONSULTANCY GROUP
Designer

CONTRACTOR
CONSULTANT:
ENGINEERING HOUSE FOR CONSULTANCY

SCALE: AS SHOWN
CHK'D DRAWING
DATE: 20.11.2024

| REV | DATE | BY | DESCRIPTION | CHK | APD |
|---|---|---|---|---|---|
| A | 20-11-24 | E.SH | ISSUE FOR APPROVAL | A.SH | M.M |

6 October Monorail
Engineering Unit
Valid For Construction

DRAWING TITLE:
6TH OF OCTOBER MONORAIL
SHOP DRAWING FOR STRADDLE BENT 6OL11-22C2
STEEL RAFTER.
PL1

| Project Code | Rubric | Initiator | Lot | Ref | Number | Revision |
|---|---|---|---|---|---|---|
| 93 | M0407 | ACC | 60L11 | DWG | 90506 | A |

REVIEWED WITH COMMENT
MONORAILS PROJECT

-Drawing shall be updated according to the comments on the GA drawing.
-Approval is subject to approval of coordination package between multi-disciplines.

All holes are 22mm U.N.O Length & Area & Weight per piece

| Mark | Profile | Grade | QTY | Length | Area | Weight |
|---|---|---|---|---|---|---|
| PL2 | PL10*135 | S355J2N | 48 | 179.9 | 0.05 | 1.9 |

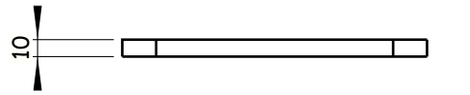


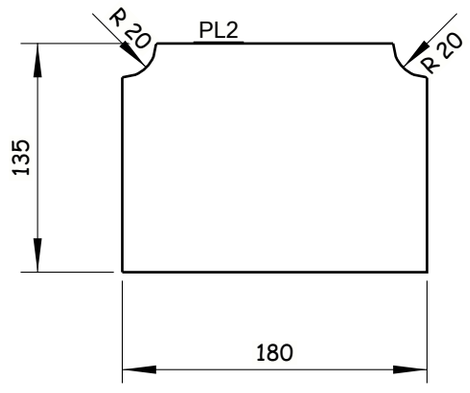


48 Nos. REQUIRED AS DRAWN E.SHPL2

Tekla Structures

GENERAL NOTES:

1. ALL DIMENSIONS ARE IN MILLIMETERS UNLESS OTHERWISE SPECIFIED.
2. LEVELS ARE IN METERS
3. DESIGN SERVICE LIFE OF 100 YEARS.
4. FLANGES OF TOP AND BOTTOM CHORDS TO BE SUPPLIED WITH IMPROVED THROUGH THICKNESS PROPERTIES Z25 ACCORDING TO EN10164.

REFERENCE DRAWINGS

| | |
|---|---|
| 1 | 93M-BOA-NAT-LOT-26612 |
| 2 | |
| 3 | |
| 4 | |
| 5 | |
| 6 | |
| 7 | |
| 8 | |
| 9 | |
| 10 | |
| 11 | |

6TH OF OCTOBER CITY RAIL TRANSIT MONORAIL &
NEW CAPITAL CITY RAIL TRANSIT MONORAIL

The Authority
Hill International
Authority Consultant

Main Contractor

Designer

CONTRACTOR
CONSULTANT:

ENGINEERING HOUSE FOR CONSULTANCY

SCALE
AS SHOWN

CHK'D DRAWING

DATE
20.11.2024

| REV | DATE | BY | DESCRIPTION | CHK | APD |
|---|---|---|---|---|---|
| A | 20-11-24 | E.SH | ISSUE FOR APPROVAL | A.SH | M.M |

6 October Monorail
Engineering Unit
Valid For Construction

DRAWING TITLE:
6TH OF OCTOBER MONORAIL
**SHOP DRAWING FOR STRADDLE BENT 6OL11-22C2**
**STEEL RAFTER.**
PL2

| Project Code | Rubric | Initiator | Lot | Ref | Number | Revision |
|---|---|---|---|---|---|---|
| 93 | M0407 | ACC | 60L111 | DWG | 90507 | A |

REVIEWED WITH COMMENT
MONORAILS PROJECT

-Drawing shall be updated according to the comments on the GA drawing.
-Approval is subject to approval of coordination package between multi-disciplines.

All holes are 22mm U.N.O Length & Area & Weight per piece

| Mark | Profile | Grade | QTY | Length | Area | Weight |
|---|---|---|---|---|---|---|
| PL3 | FLT20*350 | S355J2N | 20 | 142.5 | 0.09 | 5.8 |

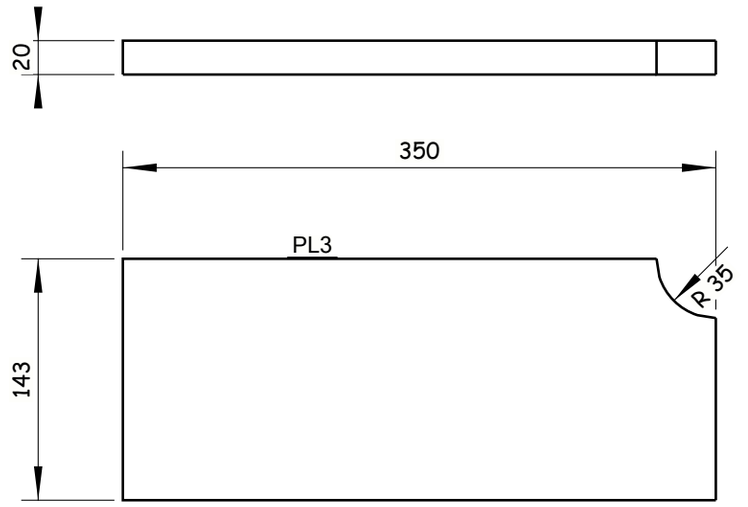


20 Nos. REQUIRED AS DRAWN E.SHPL3

Tekla Structures

GENERAL NOTES:

1. ALL DIMENSIONS ARE IN MILLIMETERS UNLESS OTHERWISE SPECIFIED.
2. LEVELS ARE IN METERS
3. DESIGN SERVICE LIFE OF 100 YEARS.
4. FLANGES OF TOP AND BOTTOM CHORDS TO BE SUPPLIED WITH IMPROVED THROUGH THICKNESS PROPERTIES Z25 ACCORDING TO EN10164.

REFERENCE DRAWINGS

| | |
|---|---|
| 1 | 93M-BOA-NAT-LOT-26612 |
| 2 | |
| 3 | |
| 4 | |
| 5 | |
| 6 | |
| 7 | |
| 8 | |
| 9 | |
| 10 | |
| 11 | |

6TH OF OCTOBER CITY RAIL TRANSIT MONORAIL &
NEW CAPITAL CITY RAIL TRANSIT MONORAIL

The Authority
Hill International
Authority Consultant

ORASCOM CONSTRUCTION
Main Contractor

SENER
SHAKER CONSULTANCY GROUP
Designer

CONTRACTOR
CONSULTANT:
ENGINEERING HOUSE FOR CONSULTANCY

SCALE: AS SHOWN | CHK'D DRAWING | DATE: 20.11.2024

| REV | DATE | BY | DESCRIPTION | CHK | APD |
|---|---|---|---|---|---|
| A | 20-11-24 | E.SH | ISSUE FOR APPROVAL | A.SH | M.M |

6 October Monorail
Engineering Unit
Valid For Construction

DRAWING TITLE:
6TH OF OCTOBER MONORAIL
SHOP DRAWING FOR STRADDLE BENT 6OL11-22C2
STEEL RAFTER.
PL3

| Project Code | Rubric | Initiator | Lot | Ref | Number | Revision |
|---|---|---|---|---|---|---|
| 93 | M0407 | ACC | 60L11 | DWG | 90508 | A |

REVIEWED WITH COMMENT
MONORAILS PROJECT

-Drawing shall be updated according to the comments on the GA drawing.
-Approval is subject to approval of coordination package between multi-disciplines.

| All holes are 22mm U.N.O Length & Area & Weight per piece | | | | | | |
|---|---|---|---|---|---|---|
| PL4 | PL15*790.1 | S355J2N | 10 | 1007.1 | 1.59 | 89.4 |
| Mark | Profile | Grade | QTY | Length | Area | Weight |

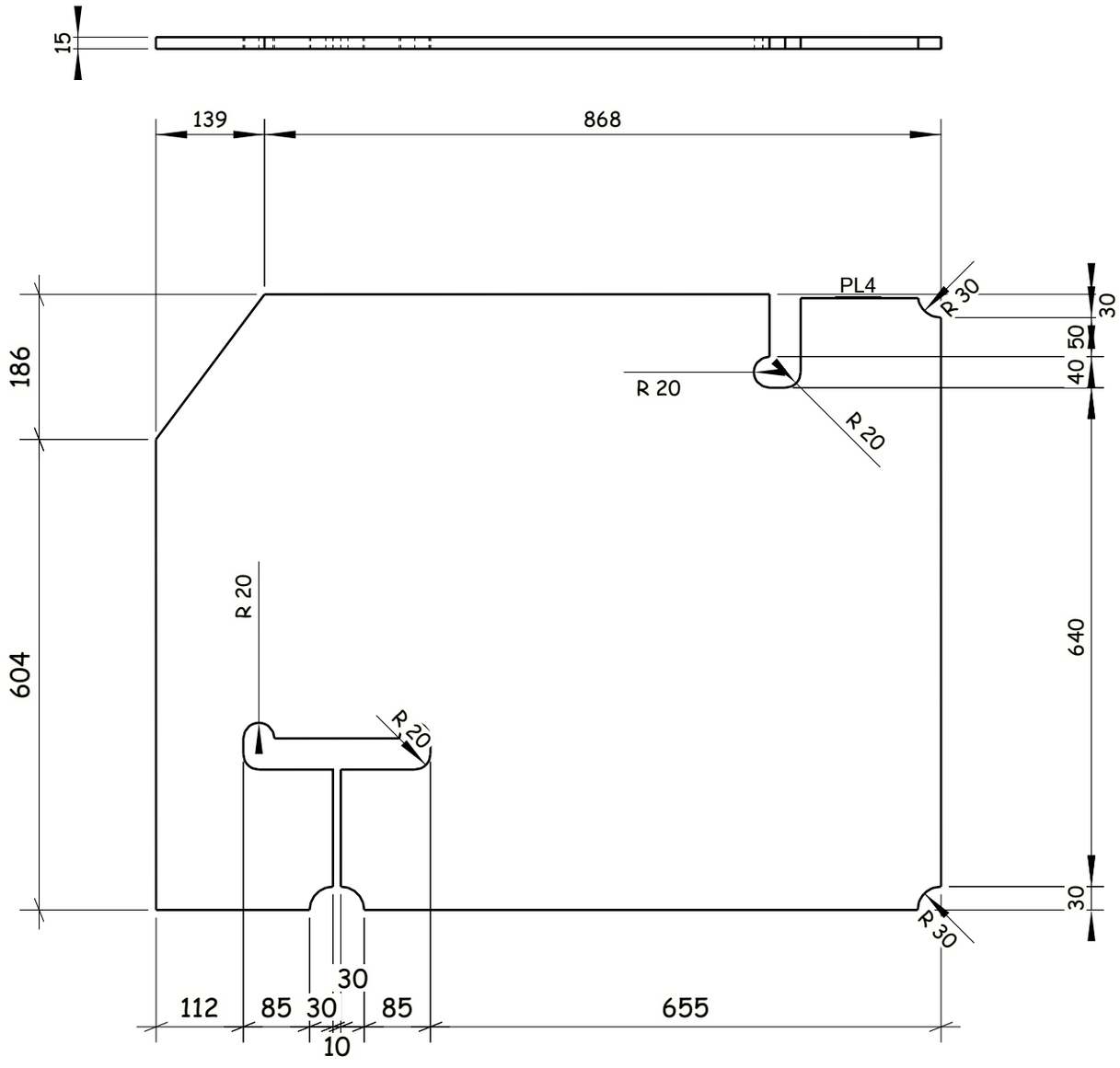


10 Nos. REQUIRED AS DRAWN E.SHPL4

6 October Monorail Engineering Unit
Valid For Construction

GENERAL NOTES:

1. ALL DIMENSIONS ARE IN MILLIMETERS UNLESS OTHERWISE SPECIFIED.
2. LEVELS ARE IN METERS
3. DESIGN SERVICE LIFE OF 100 YEARS.
4. FLANGES OF TOP AND BOTTOM CHORDS TO BE SUPPLIED WITH IMPROVED THROUGH THICKNESS PROPERTIES Z25 ACCORDING TO EN10164.

REFERENCE DRAWINGS

| | |
|---|---|
| 1 | 93M-BOA-NAT-LOT-26612 |
| 2 | |
| 3 | |
| 4 | |
| 5 | |
| 6 | |
| 7 | |
| 8 | |
| 9 | |
| 10 | |
| 11 | |

6TH OF OCTOBER CITY RAIL TRANSIT MONORAIL &
NEW CAPITAL CITY RAIL TRANSIT MONORAIL

The Authority | Hill International Authority Consultant | ORASCOM CONSTRUCTION | BOMBARDIER | Main Contractor | SENER | SHAKER CONSULTING GROUP | Designer

CONTRACTOR / CONSULTANT:
ENGINEERING HOUSE FOR CONSULTANCY

SCALE: AS SHOWN | SHOP DRAWING | DATE: 20.11.2024

DRAWING TITLE:
6TH OF OCTOBER MONORAIL
**SHOP DRAWING FOR STRADDLE BENT 6OL11-22C2 STEEL RAFTER.**
PL4

| REV | DATE | BY | DESCRIPTION | CHK | APD |
|---|---|---|---|---|---|
| A | 20-11-24 | E.SH | ISSUE FOR APPROVAL | A.SH | M.M |

| Project Code | Rubric | Initiator | Lot | Ref | Number | Revision |
|---|---|---|---|---|---|---|
| 93 | M04 | 07 | ACC | 60L11 | DWG | 90509 | A |

Tekla Structures

REVIEWED WITH COMMENT
MONORAILS PROJECT

-Drawing shall be updated according to the comments on the GA drawing.
-Approval is subject to approval of coordination package between multi-disciplines.

All holes are 22mm U.N.O  Length & Area & Weight per piece

| Mark | Profile | Grade | QTY | Length | Area | Weight |
|---|---|---|---|---|---|---|
| PL5 | PL5*66.5 | S355J2N | 20 | 313.3 | 0.05 | 0.8 |

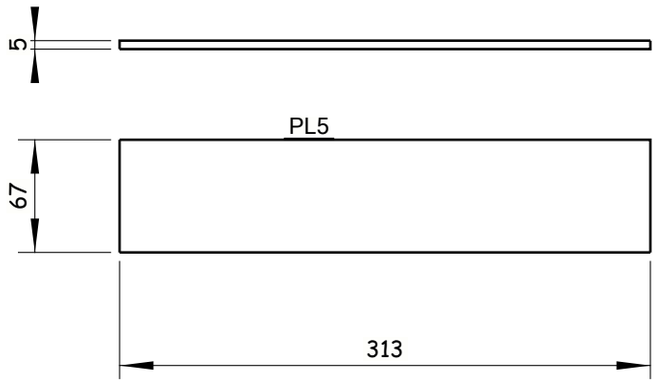


20 Nos. REQUIRED AS DRAWN E.SHPL5

Tekla Structures

GENERAL NOTES:

1. ALL DIMENSIONS ARE IN MILLIMETERS UNLESS OTHERWISE SPECIFIED.
2. LEVELS ARE IN METERS
3. DESIGN SERVICE LIFE OF 100 YEARS.
4. FLANGES OF TOP AND BOTTOM CHORDS TO BE SUPPLIED WITH IMPROVED THROUGH THICKNESS PROPERTIES Z25 ACCORDING TO EN10164.

REFERENCE DRAWINGS

| | |
|---|---|
| 1 | 93M-BOA-NAT-LOT-26612 |
| 2 | |
| 3 | |
| 4 | |
| 5 | |
| 6 | |
| 7 | |
| 8 | |
| 9 | |
| 10 | |
| 11 | |

6TH OF OCTOBER CITY RAIL TRANSIT MONORAIL &
NEW CAPITAL CITY RAIL TRANSIT MONORAIL

The Authority | Hill International Authority Consultant | Main Contractor | Designer

CONTRACTOR / CONSULTANT :

ENGINEERING HOUSE FOR CONSULTANCY

6 October Monorail
Engineering Unit
Valid For Construction

SCALE: AS SHOWN | SHD DRAWING | DATE: 20.11.2024

| REV | DATE | BY | DESCRIPTION | CHK | APD |
|---|---|---|---|---|---|
| A | 20-11-24 | E.SH | ISSUE FOR APPROVAL | A.SH | M.M |

DRAWING TITLE:
6TH OF OCTOBER MONORAIL
**SHOP DRAWING FOR STRADDLE BENT 6OL11-22C2**
**STEEL RAFTER.**
PL5

| Project Code | Rubric | Initiator | Lot | Ref | Number | Revision |
|---|---|---|---|---|---|---|
| 93M | 0407 | ACC | 60L11 | DWG | 90510 | A |

REVIEWED WITH COMMENT
MONORAILS PROJECT

-Drawing shall be updated according to the comments on the GA drawing.
-Approval is subject to approval of coordination package between multi-disciplines.

| All holes are 22mm U.N.O Length & Area & Weight per piece | | | | | | |
|---|---|---|---|---|---|---|
| PL6 | PL15*1100 | S355J2N | 8 | 1100.0 | 1.21 | 66.4 |
| Mark | Profile | Grade | QTY | Length | Area | Weight |

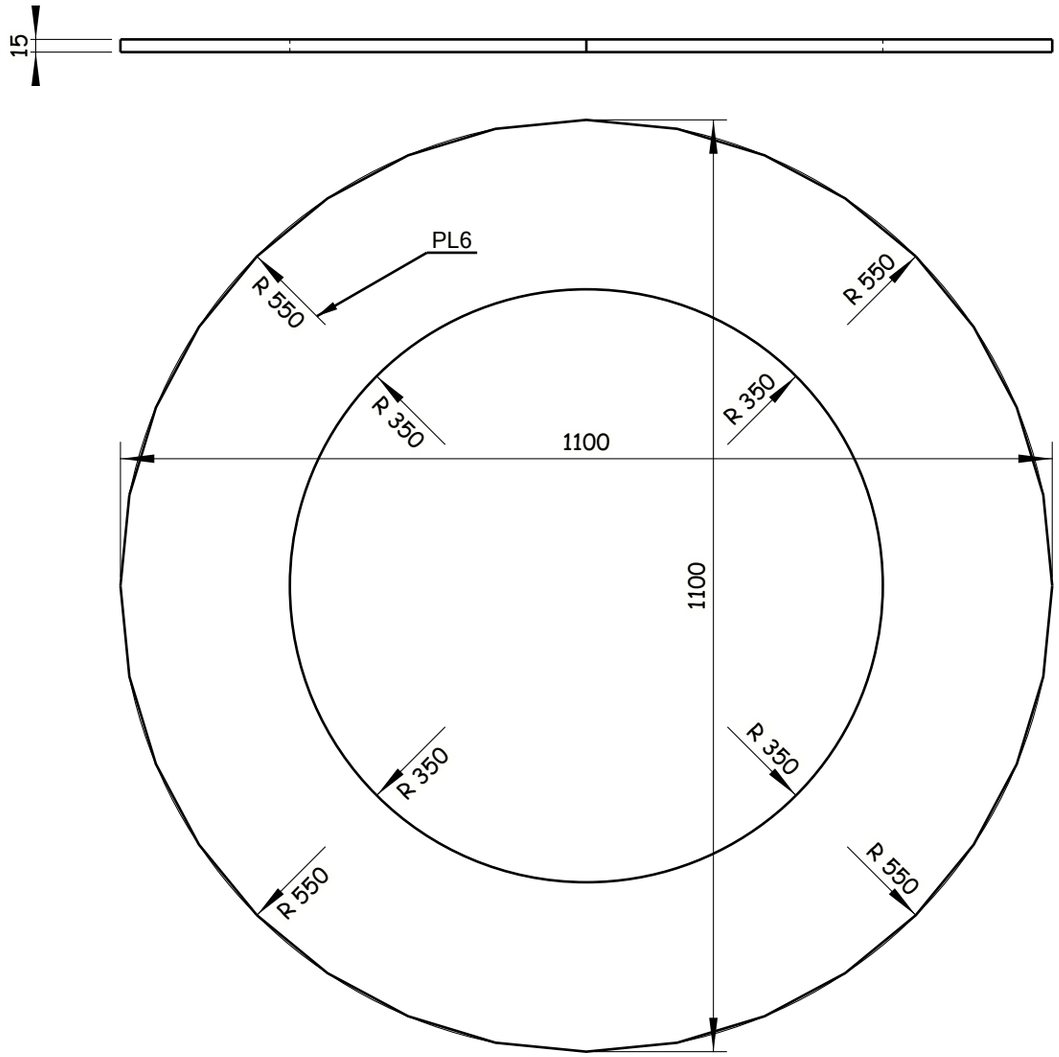


8 Nos. REQUIRED AS DRAWN E.SHPL6

Tekla Structures

GENERAL NOTES:

1. ALL DIMENSIONS ARE IN MILLIMETERS UNLESS OTHERWISE SPECIFIED.
2. LEVELS ARE IN METERS
3. DESIGN SERVICE LIFE OF 100 YEARS.
4. FLANGES OF TOP AND BOTTOM CHORDS TO BE SUPPLIED WITH IMPROVED THROUGH THICKNESS PROPERTIES Z25 ACCORDING TO EN10164.

REFERENCE DRAWINGS

| | |
|---|---|
| 1 | 93M-BOA-NAT-LOT-26612 |
| 2 | |
| 3 | |
| 4 | |
| 5 | |
| 6 | |
| 7 | |
| 8 | |
| 9 | |
| 10 | |
| 11 | |

6TH OF OCTOBER CITY RAIL TRANSIT MONORAIL &
NEW CAPITAL CITY RAIL TRANSIT MONORAIL

The Authority — Hill International — Authority Consultant
Main Contractor
Designer

CONTRACTOR / CONSULTANT: ENGINEERING HOUSE FOR CONSULTANCY

SCALE: AS SHOWN | CHK'D DRAWING | DATE: 20.11.2024

| REV | DATE | BY | DESCRIPTION | CHK | APD |
|---|---|---|---|---|---|
| A | 20-11-24 | E.SH | ISSUE FOR APPROVAL | A.SH | M.M |

6 October Monorail
Engineering Unit
Valid For Construction

DRAWING TITLE:
6TH OF OCTOBER MONORAIL
**SHOP DRAWING FOR STRADDLE BENT 6OL11-22C2**
**STEEL RAFTER.**
PL6

| Project Code | Rubric | Initiator | Lot | Ref | Number | Revision |
|---|---|---|---|---|---|---|
| 93M | 04 07 | ACC | 60 L 11 | DWG | 90511 | A |

REVIEWED WITH COMMENT
MONORAILS PROJECT

-Drawing shall be updated according to the comments on the GA drawing.
-Approval is subject to approval of coordination package between multi-disciplines.

All holes are 22mm U.N.O  Length & Area & Weight per piece

| Mark | Profile | Grade | QTY | Length | Area | Weight |
|---|---|---|---|---|---|---|
| PL7 | FLT25*300 | S355J2N | 1 | 1519.9 | 1.00 | 89.5 |

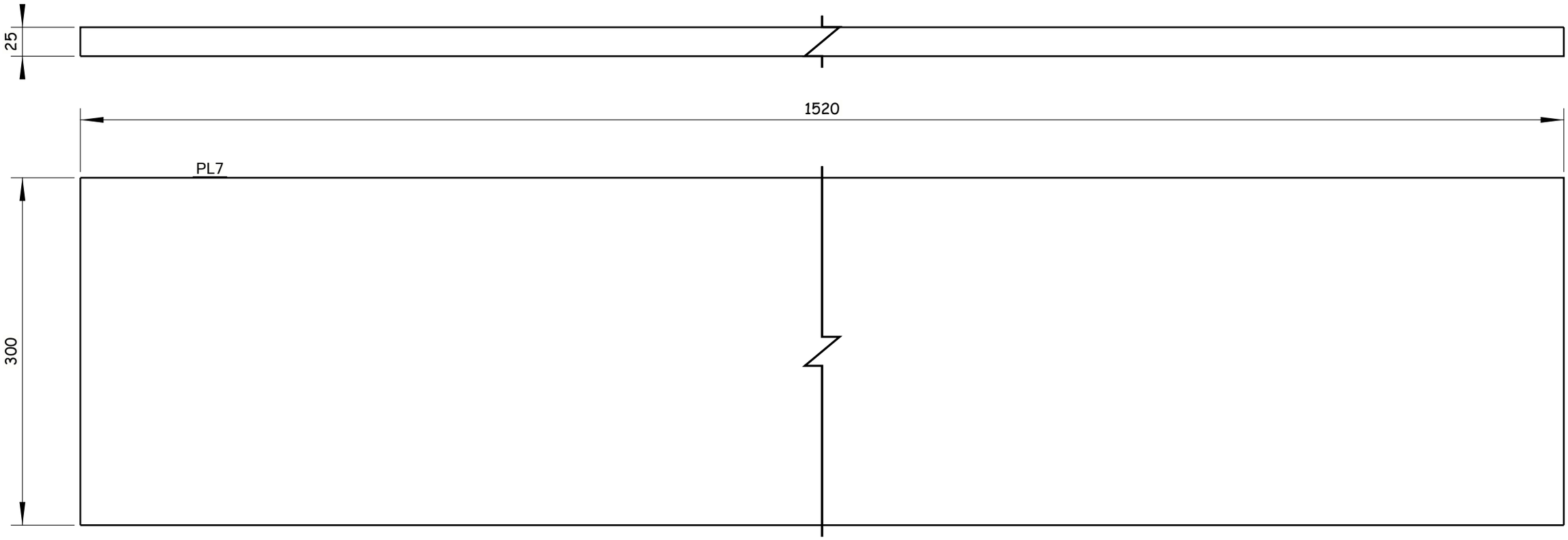


1 Nos. REQUIRED AS DRAWN E.SHPL7

Tekla Structures

GENERAL NOTES:

1. ALL DIMENSIONS ARE IN MILLIMETERS UNLESS OTHERWISE SPECIFIED.
2. LEVELS ARE IN METERS
3. DESIGN SERVICE LIFE OF 100 YEARS.
4. FLANGES OF TOP AND BOTTOM CHORDS TO BE SUPPLIED WITH IMPROVED THROUGH THICKNESS PROPERTIES Z25 ACCORDING TO EN10164.

REFERENCE DRAWINGS

| | |
|---|---|
| 1 | 93M-BOA-NAT-LOT-26612 |
| 2 | |
| 3 | |
| 4 | |
| 5 | |
| 6 | |
| 7 | |
| 8 | |
| 9 | |
| 10 | |
| 11 | |

6TH OF OCTOBER CITY RAIL TRANSIT MONORAIL &
NEW CAPITAL CITY RAIL TRANSIT MONORAIL

The Authority
Hill International
Authority Consultant

ORASCOM CONSTRUCTION
Main Contractor

BOMBARDIER
SENER
SHAKER CONSULTANCY GROUP
Designer

CONTRACTOR / CONSULTANT:
ENGINEERING HOUSE FOR CONSULTANCY

6 October Monorail
Engineering Unit
Valid For Construction

| SCALE | CHD DRAWING | DATE |
|---|---|---|
| AS SHOWN | | 20.11.2024 |

| REV | DATE | BY | DESCRIPTION | CHK | APD |
|---|---|---|---|---|---|
| A | 20-11-24 | E.SH | ISSUE FOR APPROVAL | A.SH | M.M |

DRAWING TITLE:
6TH OF OCTOBER MONORAIL
**SHOP DRAWING FOR STRADDLE BENT 6OL11-22C2**
**STEEL RAFTER.**
PL7

| Project Code | Rubric | Initiator | Lot | Ref | Number | Revision |
|---|---|---|---|---|---|---|
| 93M | 04 07 | ACC | 60L11 | DWG | 90512 | A |

REVIEWED WITH COMMENT
MONORAILS PROJECT

-Drawing shall be updated according to the comments on the GA drawing.
-Approval is subject to approval of coordination package between multi-disciplines.

All holes are 22mm U.N.O Length & Area & Weight per piece

| Mark | Profile | Grade | QTY | Length | Area | Weight |
|---|---|---|---|---|---|---|
| PL8 | FLT10*400 | S355J2N | 1 | 1519.9 | 1.23 | 46.4 |

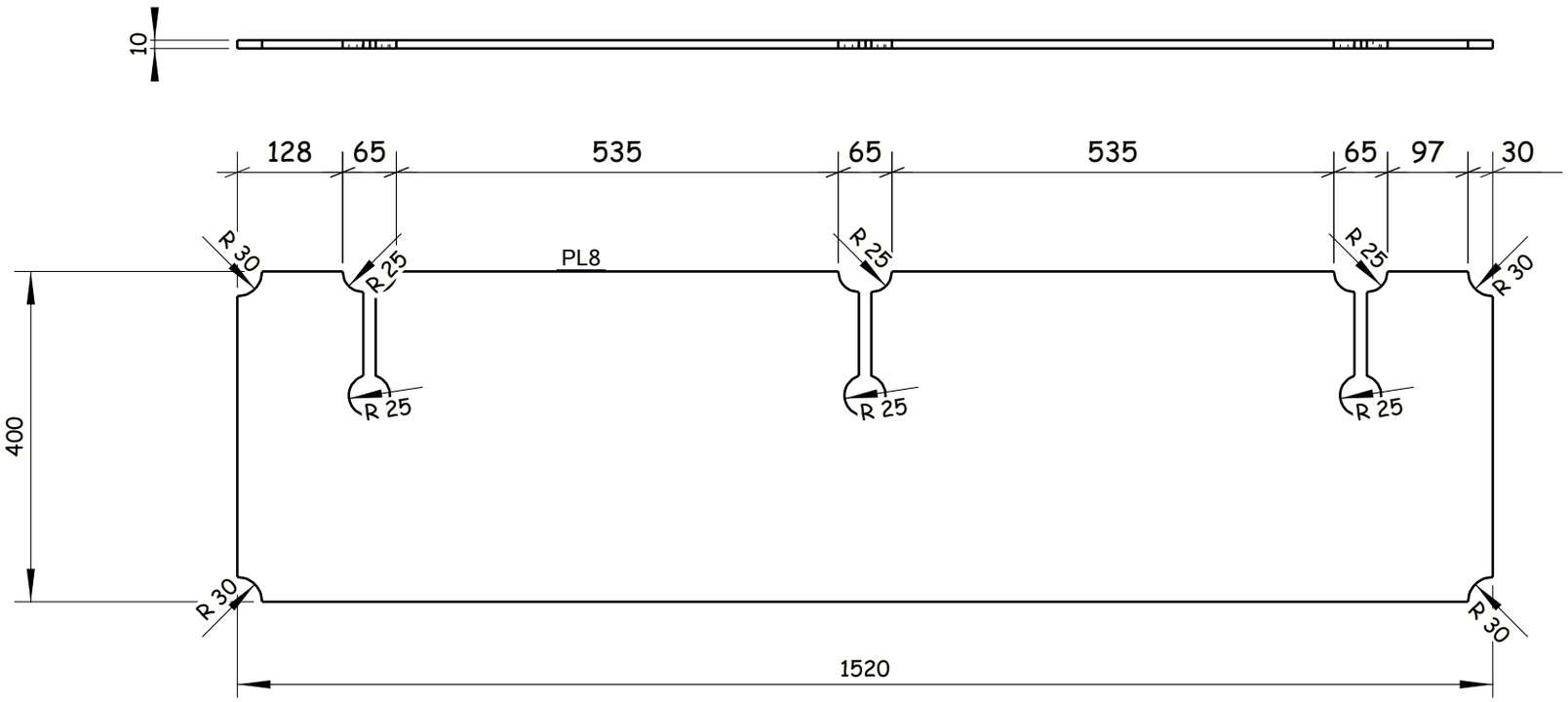


1 Nos. REQUIRED AS DRAWN E.SHPL8

Tekla Structures

GENERAL NOTES:

1. ALL DIMENSIONS ARE IN MILLIMETERS UNLESS OTHERWISE SPECIFIED.
2. LEVELS ARE IN METERS
3. DESIGN SERVICE LIFE OF 100 YEARS.
4. FLANGES OF TOP AND BOTTOM CHORDS TO BE SUPPLIED WITH IMPROVED THROUGH THICKNESS PROPERTIES Z25 ACCORDING TO EN10164.

REFERENCE DRAWINGS

| | |
|---|---|
| 1 | 93M-BOA-NAT-LOT-26612 |
| 2 | |
| 3 | |
| 4 | |
| 5 | |
| 6 | |
| 7 | |
| 8 | |
| 9 | |
| 10 | |
| 11 | |

6TH OF OCTOBER CITY RAIL TRANSIT MONORAIL &
NEW CAPITAL CITY RAIL TRANSIT MONORAIL

The Authority | Hill International Authority Consultant | ORASCOM CONSTRUCTION | Main Contractor | BOMBARDIER | SENER | SHAKER CONSULTANCY GROUP | Designer

CONTRACTOR CONSULTANT: ENGINEERING HOUSE FOR CONSULTANCY

6 October Monorail Engineering Unit
Valid For Construction

| SCALE | SHOP DRAWING | DATE |
|---|---|---|
| AS SHOWN | SHOP DRAWING | 20.11.2024 |

| REV | DATE | BY | DESCRIPTION | CHK | APD |
|---|---|---|---|---|---|
| A | 20-11-24 | E.SH | ISSUE FOR APPROVAL | A.SH | M.M |

DRAWING TITLE:
6TH OF OCTOBER MONORAIL
SHOP DRAWING FOR STRADDLE BENT 6OL11-22C2
STEEL RAFTER.
PL8

| Project Code | Rubric | Initiator | Lot | Ref | Number | Revision |
|---|---|---|---|---|---|---|
| 93M | 0407 | ACC | 60L11 | DWG | 90513 | A |

REVIEWED WITH COMMENT
MONORAILS PROJECT

-Drawing shall be updated according to the comments on the GA drawing.
-Approval is subject to approval of coordination package between multi-disciplines.

All holes are 22mm U.N.O  Length & Area & Weight per piece

| Mark | Profile | Grade | QTY | Length | Area | Weight |
|---|---|---|---|---|---|---|
| PL9 | FLT10*275 | S355J2N | 12 | 770.0 | 0.44 | 16.6 |

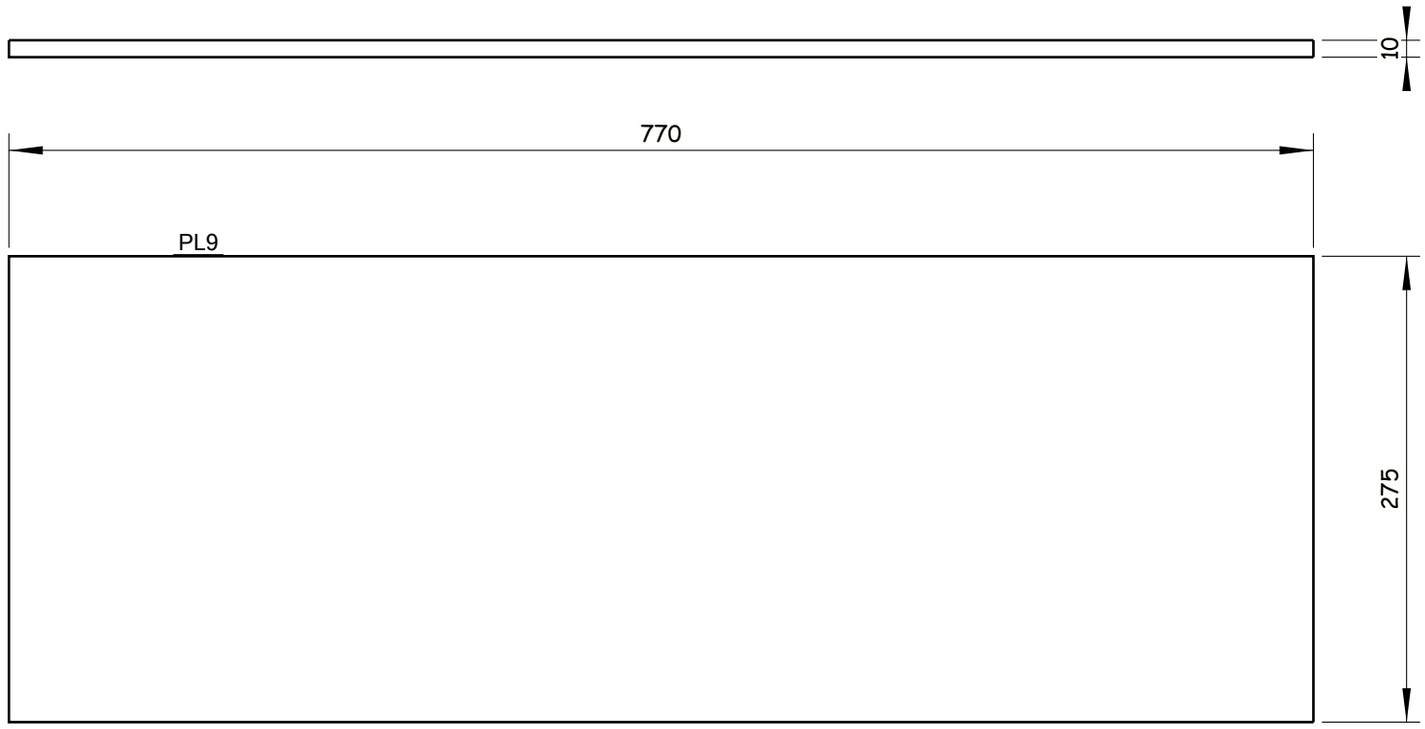


12 Nos. REQUIRED AS DRAWN E.SHPL9

6 October Monorail
Engineering Unit
Valid For Construction

Tekla Structures

GENERAL NOTES:

1. ALL DIMENSIONS ARE IN MILLIMETERS UNLESS OTHERWISE SPECIFIED.
2. LEVELS ARE IN METERS
3. DESIGN SERVICE LIFE OF 100 YEARS.
4. FLANGES OF TOP AND BOTTOM CHORDS TO BE SUPPLIED WITH IMPROVED THROUGH THICKNESS PROPERTIES Z25 ACCORDING TO EN10164.

REFERENCE DRAWINGS

| | |
|---|---|
| 1 | 93M-BOA-NAT-LOT-26612 |
| 2 | |
| 3 | |
| 4 | |
| 5 | |
| 6 | |
| 7 | |
| 8 | |
| 9 | |
| 10 | |
| 11 | |

6TH OF OCTOBER CITY RAIL TRANSIT MONORAIL &
NEW CAPITAL CITY RAIL TRANSIT MONORAIL

The Authority
Hill International
Authority Consultant

ORASCOM CONSTRUCTION
Main Contractor

BOMBARDIER
SENER
SHAKER CONSULTANCY GROUP
Designer

CONTRACTOR / CONSULTANT:
ENGINEERING HOUSE FOR CONSULTANCY

SCALE: AS SHOWN
CHK'D DRAWING
DATE: 20.11.2024

| REV | DATE | BY | DESCRIPTION | CHK | APD |
|---|---|---|---|---|---|
| A | 20-11-24 | E.SH | ISSUE FOR APPROVAL | A.SH | M.M |

DRAWING TITLE:
6TH OF OCTOBER MONORAIL
**SHOP DRAWING FOR STRADDLE BENT 6OL11-22C2**
**STEEL RAFTER.**
PL9

| Project Code | Rubric | Initiator | Lot | Ref | Number | Revision |
|---|---|---|---|---|---|---|
| 93M | 0407 | ACC | 60L11 | DWG | 90514 | A |

REVIEWED WITH COMMENT
MONORAILS PROJECT

-Drawing shall be updated according to the comments on the GA drawing.
-Approval is subject to approval of coordination package between multi-disciplines.

All holes are 22mm U.N.O Length & Area & Weight per piece

| Mark | Profile | Grade | QTY | Length | Area | Weight |
|---|---|---|---|---|---|---|
| PL10 | FLT25*500 | S355J2N | 12 | 530.0 | 0.31 | 24.9 |

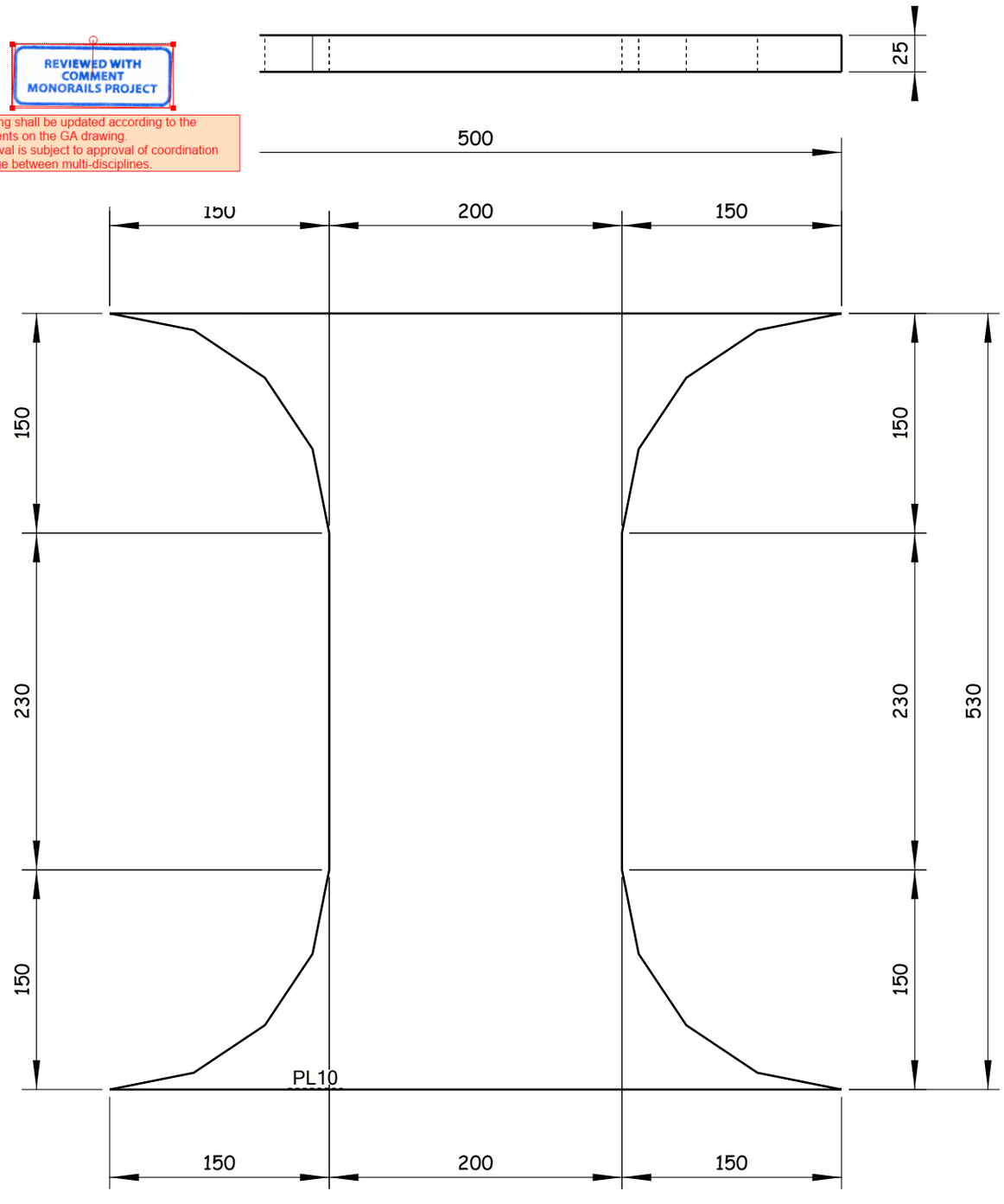


12 Nos. REQUIRED AS DRAWN E.SHPL10

Tekla Structures

GENERAL NOTES:

1. ALL DIMENSIONS ARE IN MILLIMETERS UNLESS OTHERWISE SPECIFIED.
2. LEVELS ARE IN METERS
3. DESIGN SERVICE LIFE OF 100 YEARS.
4. FLANGES OF TOP AND BOTTOM CHORDS TO BE SUPPLIED WITH IMPROVED THROUGH THICKNESS PROPERTIES Z25 ACCORDING TO EN10164.

REFERENCE DRAWINGS

| | |
|---|---|
| 1 | 93M-BOA-NAT-LOT-26612 |
| 2 | |
| 3 | |
| 4 | |
| 5 | |
| 6 | |
| 7 | |
| 8 | |
| 9 | |
| 10 | |
| 11 | |

6TH OF OCTOBER CITY RAIL TRANSIT MONORAIL &
NEW CAPITAL CITY RAIL TRANSIT MONORAIL

The Authority
Hill International
Authority Consultant

Main Contractor

Designer

CONTRACTOR / CONSULTANT:
ENGINEERING HOUSE FOR CONSULTANCY

6 October Monorail
Engineering Unit
Valid For Construction

| SCALE | CHK'D DRAWING | DATE |
|---|---|---|
| AS SHOWN | | 20.11.2024 |

| REV | DATE | BY | DESCRIPTION | CHK | APD |
|---|---|---|---|---|---|
| A | 20-11-24 | E.SH | ISSUE FOR APPROVAL | A.SH | M.M |

DRAWING TITLE:
6TH OF OCTOBER MONORAIL
**SHOP DRAWING FOR STRADDLE BENT 6OL11-22C2**
**STEEL RAFTER.**
PL10

| Project Code | Rubric | Initiator | Lot | Ref | Number | Revision |
|---|---|---|---|---|---|---|
| 93 | M04 07 | ACC | 60 L11 | DWG | 90515 | A |

REVIEWED WITH COMMENT
MONORAILS PROJECT

-Drawing shall be updated according to the comments on the GA drawing.
-Approval is subject to approval of coordination package between multi-disciplines.

All holes are 22mm U.N.O  Length & Area & Weight per piece

| Mark | Profile | Grade | QTY | Length | Area | Weight |
|---|---|---|---|---|---|---|
| PL11 | FLT25*250 | S355J2N | 8 | 315.0 | 0.15 | 12.5 |

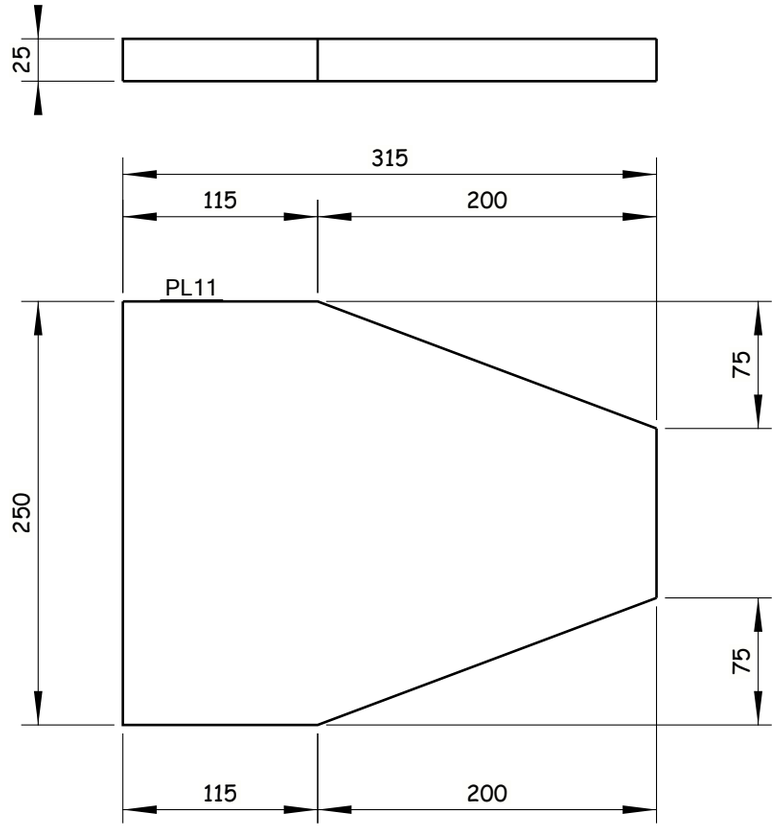


8 Nos. REQUIRED AS DRAWN E.SHPL11

Tekla Structures

GENERAL NOTES:

1. ALL DIMENSIONS ARE IN MILLIMETERS UNLESS OTHERWISE SPECIFIED.
2. LEVELS ARE IN METERS
3. DESIGN SERVICE LIFE OF 100 YEARS.
4. FLANGES OF TOP AND BOTTOM CHORDS TO BE SUPPLIED WITH IMPROVED THROUGH THICKNESS PROPERTIES Z25 ACCORDING TO EN10164.

REFERENCE DRAWINGS

| | |
|---|---|
| 1 | 93M-BOA-NAT-LOT-26612 |
| 2 | |
| 3 | |
| 4 | |
| 5 | |
| 6 | |
| 7 | |
| 8 | |
| 9 | |
| 10 | |
| 11 | |

6TH OF OCTOBER CITY RAIL TRANSIT MONORAIL &
NEW CAPITAL CITY RAIL TRANSIT MONORAIL

The Authority
Hill International
Authority Consultant
Main Contractor
Designer

CONTRACTOR & CONSULTANT:
ENGINEERING HOUSE FOR CONSULTANCY

SCALE: AS SHOWN
CHK'D DRAWING
DATE: 20.11.2024

6 October Monorail
Engineering Unit
Valid For Construction

| REV | DATE | BY | DESCRIPTION | CHK | APD |
|---|---|---|---|---|---|
| A | 20-11-24 | E.SH | ISSUE FOR APPROVAL | A.SH | M.M |

DRAWING TITLE:
6TH OF OCTOBER MONORAIL
**SHOP DRAWING FOR STRADDLE BENT 6OL11-22C2**
**STEEL RAFTER.**
PL11

| Project Code | Rubric | Initiator | Lot | Ref | Number | Revision |
|---|---|---|---|---|---|---|
| 93 | M04 | 07 | ACC | 60 | L11 | DWG | 90516 | A |

REVIEWED WITH COMMENT
MONORAILS PROJECT

-Drawing shall be updated according to the comments on the GA drawing.
-Approval is subject to approval of coordination package between multi-disciplines.

All holes are 22mm U.N.O Length & Area & Weight per piece

| Mark | Profile | Grade | QTY | Length | Area | Weight |
|---|---|---|---|---|---|---|
| PL12 | FLT10*275 | S355J2N | 8 | 590.0 | 0.22 | 8.0 |

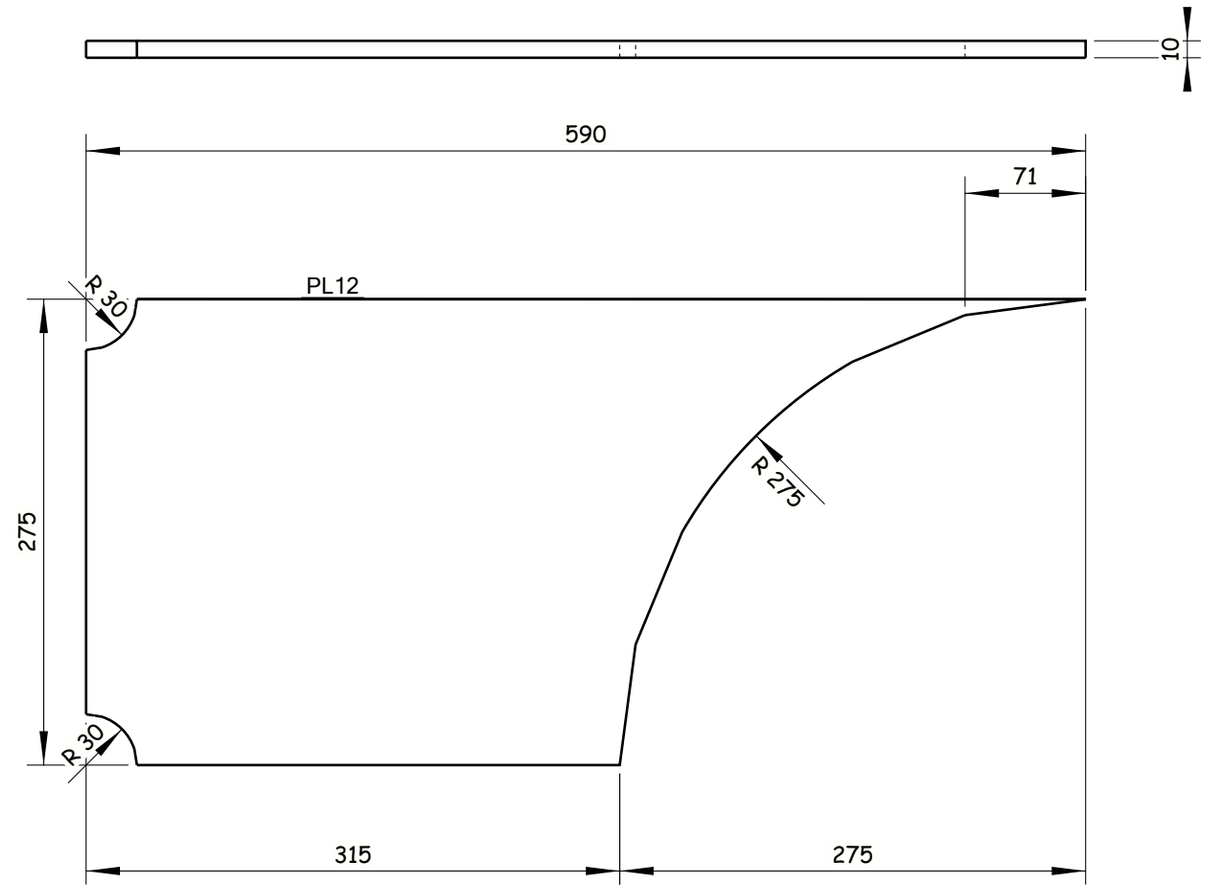


8 Nos. REQUIRED AS DRAWN E.SHPL12

Tekla Structures

GENERAL NOTES:

1. ALL DIMENSIONS ARE IN MILLIMETERS UNLESS OTHERWISE SPECIFIED.
2. LEVELS ARE IN METERS
3. DESIGN SERVICE LIFE OF 100 YEARS.
4. FLANGES OF TOP AND BOTTOM CHORDS TO BE SUPPLIED WITH IMPROVED THROUGH THICKNESS PROPERTIES Z25 ACCORDING TO EN10164.

REFERENCE DRAWINGS

| | |
|---|---|
| 1 | 93M-BOA-NAT-LOT-26612 |
| 2 | |
| 3 | |
| 4 | |
| 5 | |
| 6 | |
| 7 | |
| 8 | |
| 9 | |
| 10 | |
| 11 | |

6TH OF OCTOBER CITY RAIL TRANSIT MONORAIL &
NEW CAPITAL CITY RAIL TRANSIT MONORAIL

The Authority
Hill International
Authority Consultant

ORASCOM CONSTRUCTION
Main Contractor

BOMBARDIER
SENER
SHAKER CONSULTANCY GROUP
Designer

CONTRACTOR / CONSULTANT:
ENGINEERING HOUSE FOR CONSULTANCY

SCALE: AS SHOWN | CHK'D DRAWING | DATE: 20.11.2024

| REV | DATE | BY | DESCRIPTION | CHK | APD |
|---|---|---|---|---|---|
| A | 20-11-24 | E.SH | ISSUE FOR APPROVAL | A.SH | M.M |

6 October Monorail
Engineering Unit
Valid For Construction

DRAWING TITLE:
6TH OF OCTOBER MONORAIL
SHOP DRAWING FOR STRADDLE BENT 6OL11-22C2
STEEL RAFTER.
PL12

| Project Code | Rubric | Initiator | Lot | Ref | Number | Revision |
|---|---|---|---|---|---|---|
| 93 | M0407 | ACC | 60L11 | DWG | 90517 | A |

| All holes are 22mm U.N.O Length & Area & Weight per piece | | | | | | |
|---|---|---|---|---|---|---|
| PL13 | PL25*230 | S355J2N | 8 | 770.0 | 0.40 | 34.8 |
| Mark | Profile | Grade | QTY | Length | Area | Weight |

REVIEWED WITH COMMENT MONORAILS PROJECT

-Drawing shall be updated according to the comments on the GA drawing.
-Approval is subject to approval of coordination package between multi-disciplines.

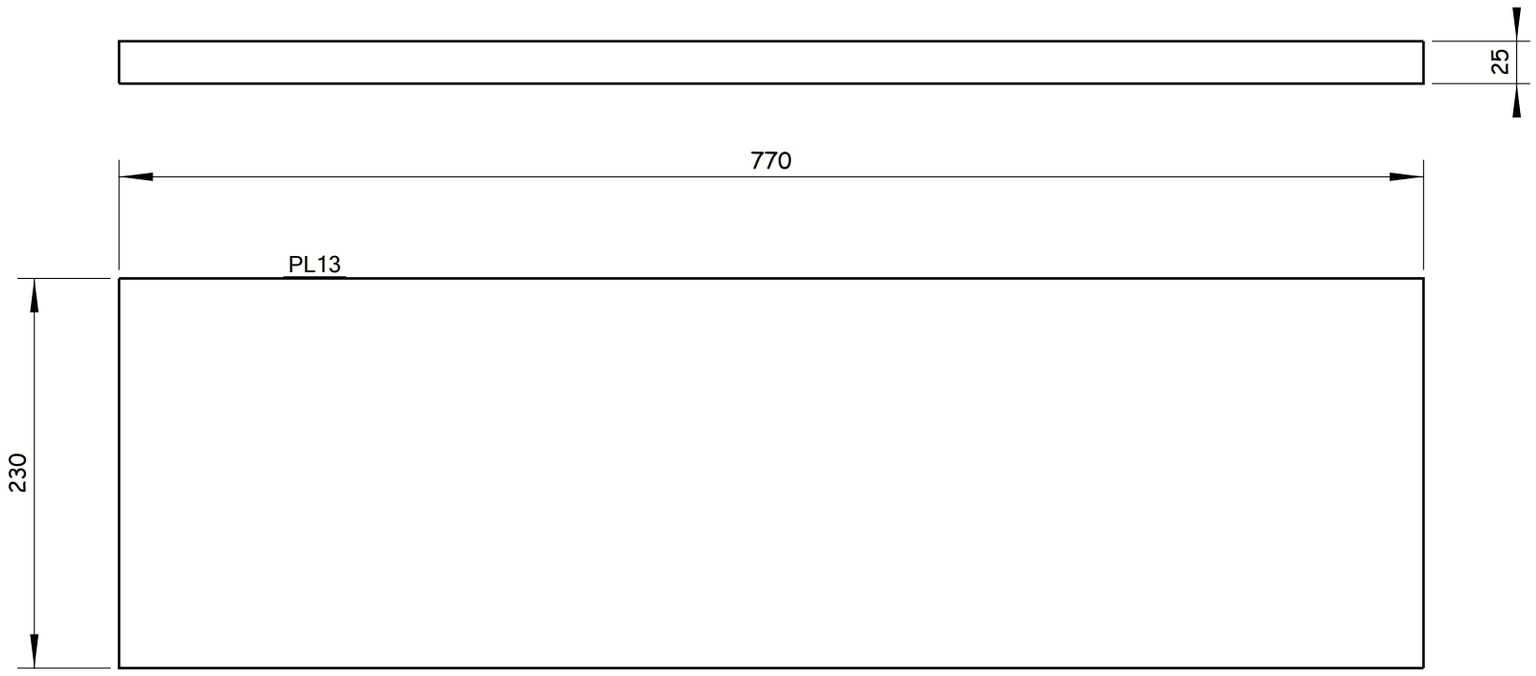


8 Nos. REQUIRED AS DRAWN E.SHPL13

6 October Monorail Engineering Unit
Valid For Construction

GENERAL NOTES:

1. ALL DIMENSIONS ARE IN MILLIMETERS UNLESS OTHERWISE SPECIFIED.
2. LEVELS ARE IN METERS
3. DESIGN SERVICE LIFE OF 100 YEARS.
4. FLANGES OF TOP AND BOTTOM CHORDS TO BE SUPPLIED WITH IMPROVED THROUGH THICKNESS PROPERTIES Z25 ACCORDING TO EN10164.

REFERENCE DRAWINGS

| | |
|---|---|
| 1 | 93M-BOA-NAT-LOT-26612 |
| 2 | |
| 3 | |
| 4 | |
| 5 | |
| 6 | |
| 7 | |
| 8 | |
| 9 | |
| 10 | |
| 11 | |

6TH OF OCTOBER CITY RAIL TRANSIT MONORAIL & NEW CAPITAL CITY RAIL TRANSIT MONORAIL

وزارة النقل
MINISTRY OF TRANSPORT
The Authority

Hill International
Authority Consultant

ORASCOM CONSTRUCTION
BOMBARDIER
Main Contractor

SENER
SHAKER CONSULTANCY GROUP
Designer

CONTRACTOR CONSULTANT:
EHC
ENGINEERING HOUSE FOR CONSULTANCY

| SCALE AS SHOWN | SHOP DRAWING | DATE 20.11.2024 |
|---|---|---|

| REV | DATE | BY | DESCRIPTION | CHK | APD |
|---|---|---|---|---|---|
| A | 20-11-24 | E.SH | ISSUE FOR APPROVAL | A.SH | M.M |

DRAWING TITLE:
6TH OF OCTOBER MONORAIL
**SHOP DRAWING FOR STRADDLE BENT 6OL11-22C2**
**STEEL RAFTER.**
PL13

| Project Code | Rubric | Initiator | Lot | Ref | Number | Revision |
|---|---|---|---|---|---|---|
| 93M | 0407 | ACC | 60L11 | DWG | 90518 | A |

Tekla Structures

REVIEWED WITH COMMENT
MONORAILS PROJECT

-Drawing shall be updated according to the comments on the GA drawing.
-Approval is subject to approval of coordination package between multi-disciplines.

All holes are 22mm U.N.O  Length & Area & Weight per piece

| Mark | Profile | Grade | QTY | Length | Area | Weight |
|---|---|---|---|---|---|---|
| PL14 | FLT20*120 | S355J2N | 32 | 275.0 | 0.08 | 4.9 |

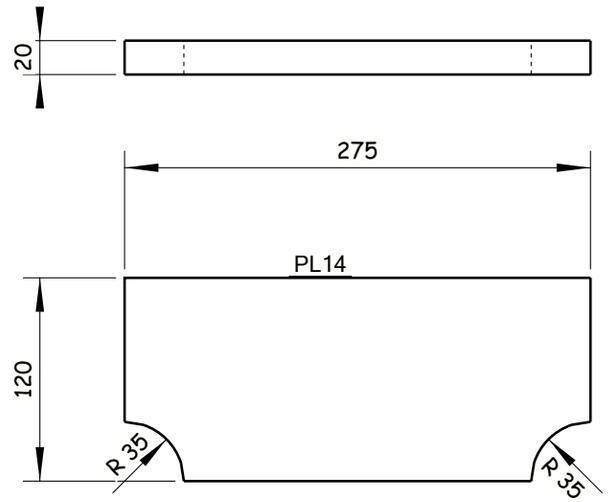


32 Nos. REQUIRED AS DRAWN E.SHPL14

Tekla Structures

GENERAL NOTES:

1. ALL DIMENSIONS ARE IN MILLIMETERS UNLESS OTHERWISE SPECIFIED.
2. LEVELS ARE IN METERS
3. DESIGN SERVICE LIFE OF 100 YEARS.
4. FLANGES OF TOP AND BOTTOM CHORDS TO BE SUPPLIED WITH IMPROVED THROUGH THICKNESS PROPERTIES Z25 ACCORDING TO EN10164.

REFERENCE DRAWINGS

| | |
|---|---|
| 1 | 93M-BOA-NAT-LOT-26612 |
| 2 | |
| 3 | |
| 4 | |
| 5 | |
| 6 | |
| 7 | |
| 8 | |
| 9 | |
| 10 | |
| 11 | |

6TH OF OCTOBER CITY RAIL TRANSIT MONORAIL &
NEW CAPITAL CITY RAIL TRANSIT MONORAIL

The Authority
Hill International
Authority Consultant

Main Contractor

Designer

CONTRACTOR / CONSULTANT:
ENGINEERING HOUSE FOR CONSULTANCY

SCALE: AS SHOWN
CHK'D DRAWING
DATE: 20.11.2024

6 October Monorail
Engineering Unit
Valid For Construction

| REV | DATE | BY | DESCRIPTION | CHK | APD |
|---|---|---|---|---|---|
| A | 20-11-24 | E.SH | ISSUE FOR APPROVAL | A.SH | M.M |

DRAWING TITLE:
6TH OF OCTOBER MONORAIL
SHOP DRAWING FOR STRADDLE BENT 6OL11-22C2
STEEL RAFTER.
PL14

| Project Code | Rubric | Initiator | Lot | Ref | Number | Revision |
|---|---|---|---|---|---|---|
| 93 | M0407 | ACC | 60L11 | DWG | 90519 | A |

REVIEWED WITH COMMENT
MONORAILS PROJECT

-Drawing shall be updated according to the comments on the GA drawing.
-Approval is subject to approval of coordination package between multi-disciplines.

All holes are 22mm U.N.O  Length & Area & Weight per piece

| Mark | Profile | Grade | QTY | Length | Area | Weight |
|---|---|---|---|---|---|---|
| PL15 | FLT20*120 | S355J2N | 4 | 271.1 | 0.08 | 4.7 |

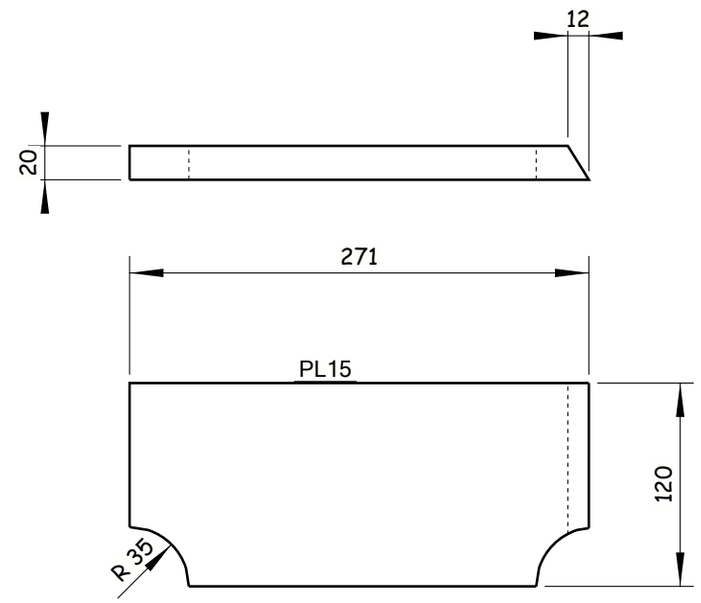


4 Nos. REQUIRED AS DRAWN E.SHPL15

Tekla Structures

GENERAL NOTES:

1. ALL DIMENSIONS ARE IN MILLIMETERS UNLESS OTHERWISE SPECIFIED.
2. LEVELS ARE IN METERS
3. DESIGN SERVICE LIFE OF 100 YEARS.
4. FLANGES OF TOP AND BOTTOM CHORDS TO BE SUPPLIED WITH IMPROVED THROUGH THICKNESS PROPERTIES Z25 ACCORDING TO EN10164.

REFERENCE DRAWINGS

| | |
|---|---|
| 1 | 93M-BOA-NAT-LOT-26612 |
| 2 | |
| 3 | |
| 4 | |
| 5 | |
| 6 | |
| 7 | |
| 8 | |
| 9 | |
| 10 | |
| 11 | |

6TH OF OCTOBER CITY RAIL TRANSIT MONORAIL &
NEW CAPITAL CITY RAIL TRANSIT MONORAIL

The Authority
Hill International
Authority Consultant

Main Contractor

Designer

CONTRACTOR/ CONSULTANT:
ENGINEERING HOUSE FOR CONSULTANCY

6 October Monorail
Engineering Unit
Valid For Construction

| REV | DATE | BY | DESCRIPTION | CHK | APD |
|---|---|---|---|---|---|
| A | 20-11-24 | E.SH | ISSUE FOR APPROVAL | A.SH | M.M |

SCALE: AS SHOWN
SHOP DRAWING
DATE: 20.11.2024

DRAWING TITLE:
6TH OF OCTOBER MONORAIL
**SHOP DRAWING FOR STRADDLE BENT 6OL11-22C2**
**STEEL RAFTER.**
PL15

| Project Code | Rubric | Initiator | Lot | Ref | Number | Revision |
|---|---|---|---|---|---|---|
| 93M | 04 07 | ACC | 60 L11 | DWG | 90520 | A |

REVIEWED WITH COMMENT
MONORAILS PROJECT

-Drawing shall be updated according to the comments on the GA drawing.
-Approval is subject to approval of coordination package between multi-disciplines.

All holes are 22mm U.N.O Length & Area & Weight per piece

| Mark | Profile | Grade | QTY | Length | Area | Weight |
|---|---|---|---|---|---|---|
| PL16 | FLT20*120 | S355J2N | 4 | 271.1 | 0.08 | 4.7 |

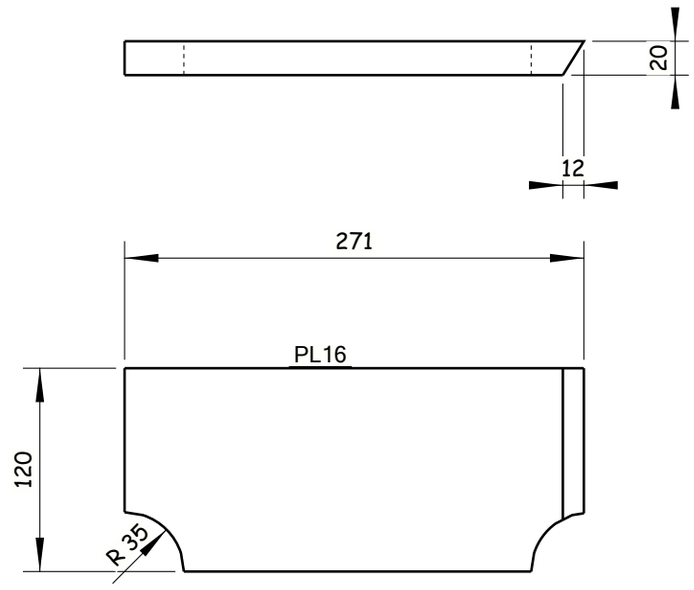


4 Nos. REQUIRED AS DRAWN E.SHPL16

Tekla Structures

GENERAL NOTES:

1. ALL DIMENSIONS ARE IN MILLIMETERS UNLESS OTHERWISE SPECIFIED.
2. LEVELS ARE IN METERS
3. DESIGN SERVICE LIFE OF 100 YEARS.
4. FLANGES OF TOP AND BOTTOM CHORDS TO BE SUPPLIED WITH IMPROVED THROUGH THICKNESS PROPERTIES Z25 ACCORDING TO EN10164.

REFERENCE DRAWINGS

| | |
|---|---|
| 1 | 93M-BOA-NAT-LOT-26612 |
| 2 | |
| 3 | |
| 4 | |
| 5 | |
| 6 | |
| 7 | |
| 8 | |
| 9 | |
| 10 | |
| 11 | |

6TH OF OCTOBER CITY RAIL TRANSIT MONORAIL &
NEW CAPITAL CITY RAIL TRANSIT MONORAIL

The Authority
Hill International
Authority Consultant

ORASCOM CONSTRUCTION
BOMBARDIER
Main Contractor

SENER
SHAKER CONSULTANCY GROUP
Designer

CONTRACTOR / CONSULTANT:
ENGINEERING HOUSE FOR CONSULTANCY

6 October Monorail
Engineering Unit
Valid For Construction

SCALE: AS SHOWN | SHOP DRAWING | DATE: 20.11.2024

| REV | DATE | BY | DESCRIPTION | CHK | APD |
|---|---|---|---|---|---|
| A | 20-11-24 | E.SH | ISSUE FOR APPROVAL | A.SH | M.M |

DRAWING TITLE:
6TH OF OCTOBER MONORAIL
**SHOP DRAWING FOR STRADDLE BENT 6OL11-22C2**
**STEEL RAFTER.**
PL16

| Project Code | Rubric | Initiator | Lot | Ref | Number | Revision |
|---|---|---|---|---|---|---|
| 9 3 M | 0 4 0 7 | A C C | 6 0 L 1 1 | D W G | 90521 | A |

REVIEWED WITH COMMENT
MONORAILS PROJECT

-Drawing shall be updated according to the comments on the GA drawing.
-Approval is subject to approval of coordination package between multi-disciplines.

All holes are 22mm U.N.O  Length & Area & Weight per piece

| Mark | Profile | Grade | QTY | Length | Area | Weight |
|---|---|---|---|---|---|---|
| PL17 | FLT20*120 | S355J2N | 4 | 272.5 | 0.08 | 4.8 |

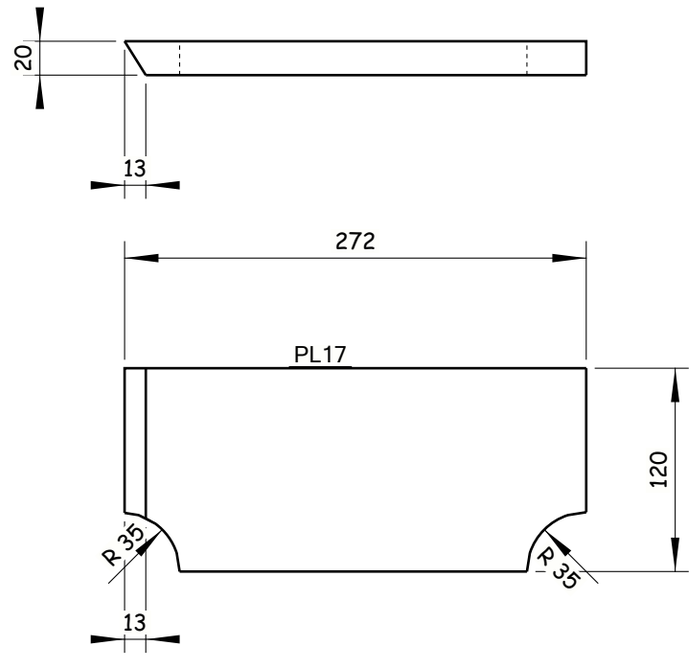


4 Nos. REQUIRED AS DRAWN E.SHPL17

Tekla Structures

GENERAL NOTES:

1. ALL DIMENSIONS ARE IN MILLIMETERS UNLESS OTHERWISE SPECIFIED.
2. LEVELS ARE IN METERS
3. DESIGN SERVICE LIFE OF 100 YEARS.
4. FLANGES OF TOP AND BOTTOM CHORDS TO BE SUPPLIED WITH IMPROVED THROUGH THICKNESS PROPERTIES Z25 ACCORDING TO EN10164.

REFERENCE DRAWINGS

| | |
|---|---|
| 1 | 93M-BOA-NAT-LOT-26612 |
| 2 | |
| 3 | |
| 4 | |
| 5 | |
| 6 | |
| 7 | |
| 8 | |
| 9 | |
| 10 | |
| 11 | |

6TH OF OCTOBER CITY RAIL TRANSIT MONORAIL &
NEW CAPITAL CITY RAIL TRANSIT MONORAIL

The Authority
Hill International
Authority Consultant

ORASCOM CONSTRUCTION
Main Contractor

BOMBARDIER
SENER
SHAKER CONSULTANCY GROUP
Designer

CONTRACTOR / CONSULTANT:
ENGINEERING HOUSE FOR CONSULTANCY

6 October Monorail
Engineering Unit
Valid For Construction

| SCALE | SHOP DRAWING | DATE |
|---|---|---|
| AS SHOWN | | 20.11.2024 |

| REV | DATE | BY | DESCRIPTION | CHK | APD |
|---|---|---|---|---|---|
| A | 20-11-24 | E.SH | ISSUE FOR APPROVAL | A.SH | M.M |

DRAWING TITLE:
6TH OF OCTOBER MONORAIL
**SHOP DRAWING FOR STRADDLE BENT 6OL11-22C2**
**STEEL RAFTER.**
PL17

| Project Code | Rubric | Initiator | Lot | Ref | Number | Revision |
|---|---|---|---|---|---|---|
| 9 3 M | 0 4 0 7 | A C C | 6 0 L 1 1 | D W G | 90522 | A |

REVIEWED WITH COMMENT
MONORAILS PROJECT

-Drawing shall be updated according to the comments on the GA drawing.
-Approval is subject to approval of coordination package between multi-disciplines.

All holes are 22mm U.N.O  Length & Area & Weight per piece

| Mark | Profile | Grade | QTY | Length | Area | Weight |
|---|---|---|---|---|---|---|
| PL18 | FLT20*120 | S355J2N | 4 | 272.5 | 0.08 | 4.8 |

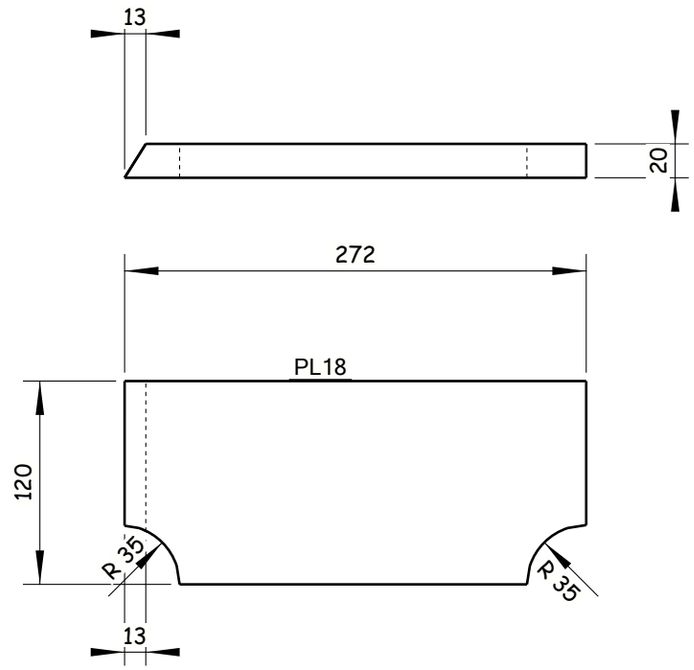


4 Nos. REQUIRED AS DRAWN E.SHPL18

Tekla Structures

GENERAL NOTES:

1. ALL DIMENSIONS ARE IN MILLIMETERS UNLESS OTHERWISE SPECIFIED.
2. LEVELS ARE IN METERS
3. DESIGN SERVICE LIFE OF 100 YEARS.
4. FLANGES OF TOP AND BOTTOM CHORDS TO BE SUPPLIED WITH IMPROVED THROUGH THICKNESS PROPERTIES Z25 ACCORDING TO EN10164.

REFERENCE DRAWINGS

| | |
|---|---|
| 1 | 93M-BOA-NAT-LOT-26612 |
| 2 | |
| 3 | |
| 4 | |
| 5 | |
| 6 | |
| 7 | |
| 8 | |
| 9 | |
| 10 | |
| 11 | |

6TH OF OCTOBER CITY RAIL TRANSIT MONORAIL &
NEW CAPITAL CITY RAIL TRANSIT MONORAIL

The Authority
Hill International
Authority Consultant

Main Contractor

Designer

CONTRACTOR / CONSULTANT :

ENGINEERING HOUSE FOR CONSULTANCY

6 October Monorail
Engineering Unit
Valid For Construction

| SCALE | SHOP DRAWING | DATE |
|---|---|---|
| AS SHOWN | | 20.11.2024 |

| REV | DATE | BY | DESCRIPTION | CHK | APD |
|---|---|---|---|---|---|
| A | 20-11-24 | E.SH | ISSUE FOR APPROVAL | A.SH | M.M |

DRAWING TITLE:
6TH OF OCTOBER MONORAIL
**SHOP DRAWING FOR STRADDLE BENT 6OL11-22C2**
**STEEL RAFTER.**
PL18

| Project Code | Rubric | Initiator | Lot | Ref | Number | Revision |
|---|---|---|---|---|---|---|
| 93M | 407 | ACC | 60L11 | DWG | 90523 | A |

REVIEWED WITH COMMENT
MONORAILS PROJECT

-Drawing shall be updated according to the comments on the GA drawing.
-Approval is subject to approval of coordination package between multi-disciplines.

All holes are 22mm U.N.O Length & Area & Weight per piece

| Mark | Profile | Grade | QTY | Length | Area | Weight |
|---|---|---|---|---|---|---|
| PL19 | PL50*140 | S355K2N | 56 | 140.0 | 0.07 | 7.3 |

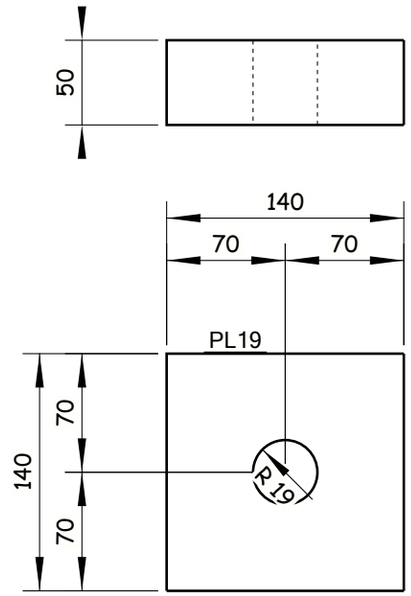


56 Nos. REQUIRED AS DRAWN E.SHPL19

Tekla Structures

GENERAL NOTES:

1. ALL DIMENSIONS ARE IN MILLIMETERS UNLESS OTHERWISE SPECIFIED.
2. LEVELS ARE IN METERS
3. DESIGN SERVICE LIFE OF 100 YEARS.
4. FLANGES OF TOP AND BOTTOM CHORDS TO BE SUPPLIED WITH IMPROVED THROUGH THICKNESS PROPERTIES Z25 ACCORDING TO EN10164.

REFERENCE DRAWINGS

| | |
|---|---|
| 1 | 93M-BOA-NAT-LOT-26612 |
| 2 | |
| 3 | |
| 4 | |
| 5 | |
| 6 | |
| 7 | |
| 8 | |
| 9 | |
| 10 | |
| 11 | |

6TH OF OCTOBER CITY RAIL TRANSIT MONORAIL &
NEW CAPITAL CITY RAIL TRANSIT MONORAIL

The Authority
Hill International
Authority Consultant

ORASCOM CONSTRUCTION
BOMBARDIER
Main Contractor

SENER
SHAKER CONSULTANCY GROUP
Designer

CONTRACTOR / CONSULTANT:
ENGINEERING HOUSE FOR CONSULTANCY

6 October Monorail
Engineering Unit
Valid For Construction

SCALE: AS SHOWN | SHD DRAWING | DATE: 20.11.2024

| REV | DATE | BY | DESCRIPTION | CHK | APD |
|---|---|---|---|---|---|
| A | 20-11-24 | E.SH | ISSUE FOR APPROVAL | A.SH | M.M |

DRAWING TITLE:
6TH OF OCTOBER MONORAIL
**SHOP DRAWING FOR STRADDLE BENT 6OL11-22C2**
**STEEL RAFTER.**
PL19

| Project Code | Rubric | Initiator | Lot | Ref | Number | Revision |
|---|---|---|---|---|---|---|
| 93M | 04 | 07 | ACC | 60 | L11 | DWG | 90524 | A |

REVIEWED WITH COMMENT
MONORAILS PROJECT

-Drawing shall be updated according to the comments on the GA drawing.
-Approval is subject to approval of coordination package between multi-disciplines.

All holes are 22mm U.N.O Length & Area & Weight per piece

| Mark | Profile | Grade | QTY | Length | Area | Weight |
|---|---|---|---|---|---|---|
| PL20 | PL140*50 | S355K2N | 120 | 140.0 | 0.07 | 7.3 |

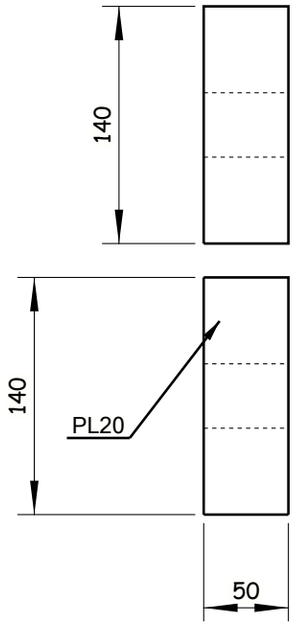


120 Nos. REQUIRED AS DRAWN E.SHPL20

Tekla Structures

GENERAL NOTES:

1. ALL DIMENSIONS ARE IN MILLIMETERS UNLESS OTHERWISE SPECIFIED.
2. LEVELS ARE IN METERS
3. DESIGN SERVICE LIFE OF 100 YEARS.
4. FLANGES OF TOP AND BOTTOM CHORDS TO BE SUPPLIED WITH IMPROVED THROUGH THICKNESS PROPERTIES Z25 ACCORDING TO EN10164.

REFERENCE DRAWINGS

| | |
|---|---|
| 1 | 93M-BOA-NAT-LOT-26612 |
| 2 | |
| 3 | |
| 4 | |
| 5 | |
| 6 | |
| 7 | |
| 8 | |
| 9 | |
| 10 | |
| 11 | |

6TH OF OCTOBER CITY RAIL TRANSIT MONORAIL &
NEW CAPITAL CITY RAIL TRANSIT MONORAIL

The Authority | Hill International Authority Consultant | ORASCOM CONSTRUCTION | BOMBARDIER | Main Contractor | SENER | SHAKER CONSULTANCY GROUP | Designer

CONTRACTOR & CONSULTANT:
ENGINEERING HOUSE FOR CONSULTANCY

SCALE: AS SHOWN | SHD DRAWING | DATE: 20.11.2024

| REV | DATE | BY | DESCRIPTION | CHK | APD |
|---|---|---|---|---|---|
| A | 20-11-24 | E.SH | ISSUE FOR APPROVAL | A.SH | M.M |

6 October Monorail
Engineering Unit
Valid For Construction

DRAWING TITLE:
6TH OF OCTOBER MONORAIL
**SHOP DRAWING FOR STRADDLE BENT 6OL11-22C2**
**STEEL RAFTER.**
PL20

| Project Code | Rubric | Initiator | Lot | Ref | Number | Revision |
|---|---|---|---|---|---|---|
| 93M | 0407 | ACC | 60LL11 | DWG | 90525 | A |

REVIEWED WITH COMMENT
MONORAILS PROJECT

-Drawing shall be updated according to the comments on the GA drawing.
-Approval is subject to approval of coordination package between multi-disciplines.

All holes are 22mm U.N.O  Length & Area & Weight per piece

| Mark | Profile | Grade | QTY | Length | Area | Weight |
|---|---|---|---|---|---|---|
| PL21 | PL50*140 | S355K2N | 64 | 140.0 | 0.07 | 7.3 |

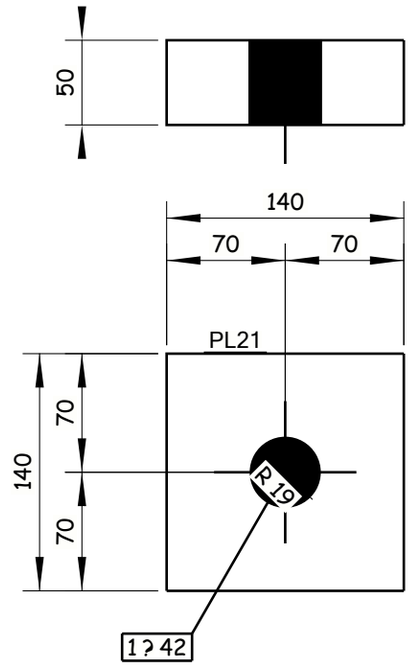


64 Nos. REQUIRED AS DRAWN E.SHPL21

Tekla Structures

GENERAL NOTES:

1. ALL DIMENSIONS ARE IN MILLIMETERS UNLESS OTHERWISE SPECIFIED.
2. LEVELS ARE IN METERS
3. DESIGN SERVICE LIFE OF 100 YEARS.
4. FLANGES OF TOP AND BOTTOM CHORDS TO BE SUPPLIED WITH IMPROVED THROUGH THICKNESS PROPERTIES Z25 ACCORDING TO EN10164.

REFERENCE DRAWINGS

| | |
|---|---|
| 1 | 93M-BOA-NAT-LOT-26612 |
| 2 | |
| 3 | |
| 4 | |
| 5 | |
| 6 | |
| 7 | |
| 8 | |
| 9 | |
| 10 | |
| 11 | |

6TH OF OCTOBER CITY RAIL TRANSIT MONORAIL &
NEW CAPITAL CITY RAIL TRANSIT MONORAIL

The Authority
Hill International
Authority Consultant

Main Contractor

Designer

6 October Monorail
Engineering Unit
Valid For Construction

CONTRACTOR/ CONSULTANT:
ENGINEERING HOUSE FOR CONSULTANCY

SCALE: AS SHOWN | SHOP DRAWING | DATE: 20.11.2024

| REV | DATE | BY | DESCRIPTION | CHK | APD |
|---|---|---|---|---|---|
| A | 20-11-24 | E.SH | ISSUE FOR APPROVAL | A.SH | M.M |

DRAWING TITLE:
6TH OF OCTOBER MONORAIL
**SHOP DRAWING FOR STRADDLE BENT 6OL11-22C2**
**STEEL RAFTER.**
PL21

| Project Code | Rubric | Initiator | Lot | Ref | Number | Revision |
|---|---|---|---|---|---|---|
| 93M | 04 | 07 | ACC | 60L11 | DWG | 90526 | A |

REVIEWED WITH COMMENT
MONORAILS PROJECT

-Drawing shall be updated according to the comments on the GA drawing.
-Approval is subject to approval of coordination package between multi-disciplines.

All holes are 22mm U.N.O Length & Area & Weight per piece

| Mark | Profile | Grade | QTY | Length | Area | Weight |
|---|---|---|---|---|---|---|
| R1 | ROD36 | S355J2N | 56 | 2750.0 | 0.31 | 21.0 |

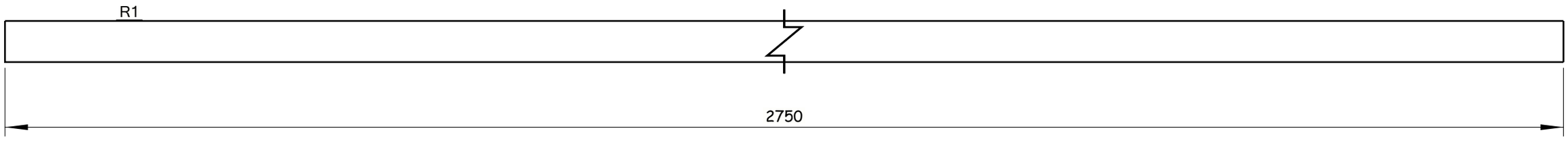


56 Nos. REQUIRED AS DRAWN E.SHR1

Tekla Structures

GENERAL NOTES:

1. ALL DIMENSIONS ARE IN MILLIMETERS UNLESS OTHERWISE SPECIFIED.
2. LEVELS ARE IN METERS
3. DESIGN SERVICE LIFE OF 100 YEARS.
4. FLANGES OF TOP AND BOTTOM CHORDS TO BE SUPPLIED WITH IMPROVED THROUGH THICKNESS PROPERTIES Z25 ACCORDING TO EN10164.

REFERENCE DRAWINGS

| | |
|---|---|
| 1 | 93M-BOA-NAT-LOT-26612 |
| 2 | |
| 3 | |
| 4 | |
| 5 | |
| 6 | |
| 7 | |
| 8 | |
| 9 | |
| 10 | |
| 11 | |

6TH OF OCTOBER CITY RAIL TRANSIT MONORAIL &
NEW CAPITAL CITY RAIL TRANSIT MONORAIL

The Authority
Hill International
Authority Consultant

Main Contractor

Designer

6 October Monorail
Engineering Unit
Valid For Construction

CONTRACTOR & CONSULTANT:
ENGINEERING HOUSE FOR CONSULTANCY

SCALE: AS SHOWN | CHK'D DRAWING | DATE: 20.11.2024

| REV | DATE | BY | DESCRIPTION | CHK | APD |
|---|---|---|---|---|---|
| A | 20-11-24 | E.SH | ISSUE FOR APPROVAL | A.SH | M.M |

DRAWING TITLE:
6TH OF OCTOBER MONORAIL
**SHOP DRAWING FOR STRADDLE BENT 6OL11-22C2 STEEL RAFTER.**
R1

| Project Code | Rubric | Initiator | Lot | Ref | Number | Revision |
|---|---|---|---|---|---|---|
| 93 | M04 | 07 | ACC | 60L11 | DWG | 90527 | A |

REVIEWED WITH COMMENT
MONORAILS PROJECT

-Drawing shall be updated according to the comments on the GA drawing.
-Approval is subject to approval of coordination package between multi-disciplines.

All holes are 22mm U.N.O  Length & Area & Weight per piece

| Mark | Profile | Grade | QTY | Length | Area | Weight |
|---|---|---|---|---|---|---|
| R2 | ROD36 | S355J2N | 64 | 2250.0 | 0.25 | 17.2 |

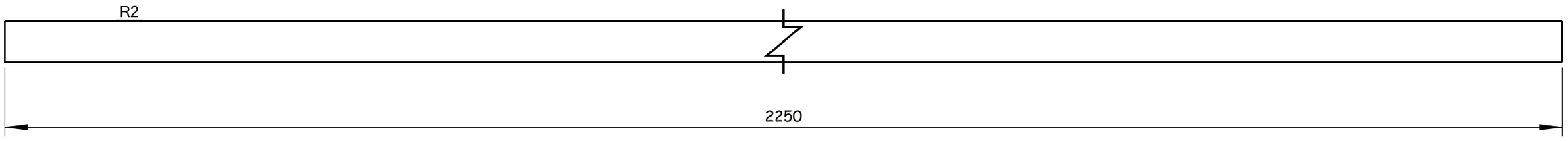


64 Nos. REQUIRED AS DRAWN E.SHR2

Tekla Structures

GENERAL NOTES:

1. ALL DIMENSIONS ARE IN MILLIMETERS UNLESS OTHERWISE SPECIFIED.
2. LEVELS ARE IN METERS
3. DESIGN SERVICE LIFE OF 100 YEARS.
4. FLANGES OF TOP AND BOTTOM CHORDS TO BE SUPPLIED WITH IMPROVED THROUGH THICKNESS PROPERTIES Z25 ACCORDING TO EN10164.

REFERENCE DRAWINGS

| | |
|---|---|
| 1 | 93M-BOA-NAT-LOT-26612 |
| 2 | |
| 3 | |
| 4 | |
| 5 | |
| 6 | |
| 7 | |
| 8 | |
| 9 | |
| 10 | |
| 11 | |

6TH OF OCTOBER CITY RAIL TRANSIT MONORAIL &
NEW CAPITAL CITY RAIL TRANSIT MONORAIL

The Authority — Hill International — Authority Consultant
ORASCOM CONSTRUCTION — BOMBARDIER — Main Contractor
SENER — SHAKER CONSULTANCY GROUP — Designer

CONTRACTOR & CONSULTANT:
ENGINEERING HOUSE FOR CONSULTANCY

6 October Monorail
Engineering Unit
Valid For Construction

SCALE: AS SHOWN | SHOP DRAWING | DATE: 20.11.2024

DRAWING TITLE:
6TH OF OCTOBER MONORAIL
**SHOP DRAWING FOR STRADDLE BENT 6OL11-22C2**
**STEEL RAFTER.**
R2

| REV | DATE | BY | DESCRIPTION | CHK | APD |
|---|---|---|---|---|---|
| A | 20-11-24 | E.SH | ISSUE FOR APPROVAL | A.SH | M.M |

| Project Code | Rubric | Initiator | Lot | Ref | Number | Revision |
|---|---|---|---|---|---|---|
| 93 | M0407 | ACC | 60L11 | DWG | 90528 | A |

REVIEWED WITH COMMENT
MONORAILS PROJECT

-Drawing shall be updated according to the comments on the GA drawing.
-Approval is subject to approval of coordination package between multi-disciplines.

All holes are 22mm U.N.O  Length & Area & Weight per piece

| Mark | Profile | Grade | QTY | Length | Area | Weight |
|---|---|---|---|---|---|---|
| S1 | ROD22 | S275*** | 2749 | 170.1 | 0.01 | 0.5 |

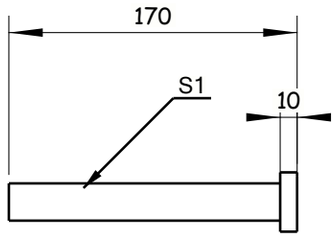


2749 Nos. REQUIRED AS DRAWN E.SHS1

6 October Monorail
Engineering Unit
Valid For Construction

Tekla Structures

GENERAL NOTES:

1. ALL DIMENSIONS ARE IN MILLIMETERS UNLESS OTHERWISE SPECIFIED.
2. LEVELS ARE IN METERS
3. DESIGN SERVICE LIFE OF 100 YEARS.
4. FLANGES OF TOP AND BOTTOM CHORDS TO BE SUPPLIED WITH IMPROVED THROUGH THICKNESS PROPERTIES Z25 ACCORDING TO EN10164.

REFERENCE DRAWINGS

| | |
|---|---|
| 1 | 93M-BOA-NAT-LOT-26612 |
| 2 | |
| 3 | |
| 4 | |
| 5 | |
| 6 | |
| 7 | |
| 8 | |
| 9 | |
| 10 | |
| 11 | |

6TH OF OCTOBER CITY RAIL TRANSIT MONORAIL &
NEW CAPITAL CITY RAIL TRANSIT MONORAIL

The Authority
Hill International
Authority Consultant

Main Contractor

Designer

CONTRACTOR & CONSULTANT:
ENGINEERING HOUSE FOR CONSULTANCY

SCALE: AS SHOWN
CHK'D DRAWING
DATE: 20.11.2024

| REV | DATE | BY | DESCRIPTION | CHK | APD |
|---|---|---|---|---|---|
| A | 20-11-24 | E.SH | ISSUE FOR APPROVAL | A.SH | M.M |

DRAWING TITLE:
6TH OF OCTOBER MONORAIL
**SHOP DRAWING FOR STRADDLE BENT 6OL11-22C2**
**STEEL RAFTER.**
S1

| Project Code | Rubric | Initiator | Lot | Ref | Number | Revision |
|---|---|---|---|---|---|---|
| 93M | 0407 | ACC | 60L11 | DWG | 90529 | A |

REVIEWED WITH COMMENT
MONORAILS PROJECT

-Drawing shall be updated according to the comments on the GA drawing.
-Approval is subject to approval of coordination package between multi-disciplines.

All holes are 22mm U.N.O Length & Area & Weight per piece

| Mark | Profile | Grade | QTY | Length | Area | Weight |
|---|---|---|---|---|---|---|
| S.S1 | ROD20 | S275*** | 1808 | 175.0 | 0.01 | 0.4 |

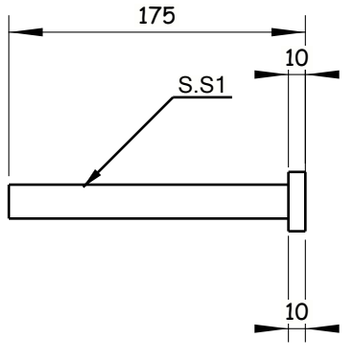


1808 Nos. REQUIRED AS DRAWN E.SHS.S1

6 October Monorail
Engineering Unit
Valid For Construction

Tekla Structures

GENERAL NOTES:

1. ALL DIMENSIONS ARE IN MILLIMETERS UNLESS OTHERWISE SPECIFIED.
2. LEVELS ARE IN METERS
3. DESIGN SERVICE LIFE OF 100 YEARS.
4. FLANGES OF TOP AND BOTTOM CHORDS TO BE SUPPLIED WITH IMPROVED THROUGH THICKNESS PROPERTIES Z25 ACCORDING TO EN10164.

REFERENCE DRAWINGS

| | |
|---|---|
| 1 | 93M-BOA-NAT-LOT-26612 |
| 2 | |
| 3 | |
| 4 | |
| 5 | |
| 6 | |
| 7 | |
| 8 | |
| 9 | |
| 10 | |
| 11 | |

6TH OF OCTOBER CITY RAIL TRANSIT MONORAIL &
NEW CAPITAL CITY RAIL TRANSIT MONORAIL

The Authority
Hill International
Authority Consultant

ORASCOM CONSTRUCTION
BOMBARDIER
Main Contractor

SENER
SHAKER CONSULTANCY GROUP
Designer

CONTRACTOR:
CONSULTANT:
ENGINEERING HOUSE FOR CONSULTANCY

| REV | DATE | BY | DESCRIPTION | CHK | APD |
|---|---|---|---|---|---|
| A | 20-11-24 | E.SH | ISSUE FOR APPROVAL | A.SH | M.M |

SCALE: AS SHOWN
SHOP DRAWING
DATE: 20.11.2024

DRAWING TITLE:
6TH OF OCTOBER MONORAIL
**SHOP DRAWING FOR STRADDLE BENT 6OL11-22C2**
**STEEL RAFTER.**
S.S1

| Project Code | Rubric | Initiator | Lot | Ref | Number | Revision |
|---|---|---|---|---|---|---|
| 93MO407 | ACC | 60L11 | DWG | 90530 | A |

REVIEWED WITH COMMENT
MONORAILS PROJECT

-Drawing shall be updated according to the comments on the GA drawing.
-Approval is subject to approval of coordination package between multi-disciplines.

All holes are 22mm U.N.O  Length & Area & Weight per piece

| Mark | Profile | Grade | QTY | Length | Area | Weight |
|---|---|---|---|---|---|---|
| S.S2 | ROD20 | S275*** | 2 | 170.0 | 0.01 | 0.4 |

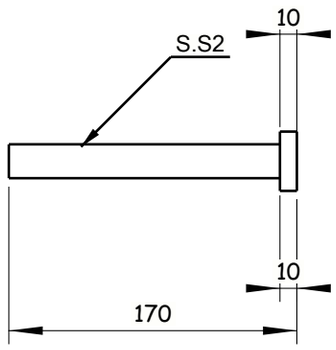


2 Nos.REQUIRED AS DRAWN E.SHS.S2

Tekla Structures

GENERAL NOTES:

1. ALL DIMENSIONS ARE IN MILLIMETERS UNLESS OTHERWISE SPECIFIED.
2. LEVELS ARE IN METERS
3. DESIGN SERVICE LIFE OF 100 YEARS.
4. FLANGES OF TOP AND BOTTOM CHORDS TO BE SUPPLIED WITH IMPROVED THROUGH THICKNESS PROPERTIES Z25 ACCORDING TO EN10164.

REFERENCE DRAWINGS

| | |
|---|---|
| 1 | 93M-BOA-NAT-LOT-26612 |
| 2 | |
| 3 | |
| 4 | |
| 5 | |
| 6 | |
| 7 | |
| 8 | |
| 9 | |
| 10 | |
| 11 | |

6TH OF OCTOBER CITY RAIL TRANSIT MONORAIL &
NEW CAPITAL CITY RAIL TRANSIT MONORAIL

The Authority | Hill International Authority Consultant | ORASCOM CONSTRUCTION | BOMBARDIER | Main Contractor | SENER | SHAKER CONSULTANCY GROUP | Designer

CONTRACTOR/ CONSULTANT:
ENGINEERING HOUSE FOR CONSULTANCY

6 October Monorail
Engineering Unit
Valid For Construction

| SCALE | SHOP DRAWING | DATE |
|---|---|---|
| AS SHOWN | | 20.11.2024 |

| REV | DATE | BY | DESCRIPTION | CHK | APD |
|---|---|---|---|---|---|
| A | 20-11-24 | E.SH | ISSUE FOR APPROVAL | A.SH | M.M |

DRAWING TITLE:
6TH OF OCTOBER MONORAIL
**SHOP DRAWING FOR STRADDLE BENT 6OL11-22C2**
**STEEL RAFTER.**
S.S2

| Project Code | Rubric | Initiator | Lot | Ref | Number | Revision |
|---|---|---|---|---|---|---|
| 93M | 0407 | ACC | 60L11 | DWG | 90531 | A |

REVIEWED WITH COMMENT
MONORAILS PROJECT

-Drawing shall be updated according to the comments on the GA drawing.
-Approval is subject to approval of coordination package between multi-disciplines.

All holes are 22mm U.N.O Length & Area & Weight per piece

| Mark | Profile | Grade | QTY | Length | Area | Weight |
|---|---|---|---|---|---|---|
| TF1 | FLT20*200 | S355J2N | 17 | 12000.0 | 5.29 | 376.8 |

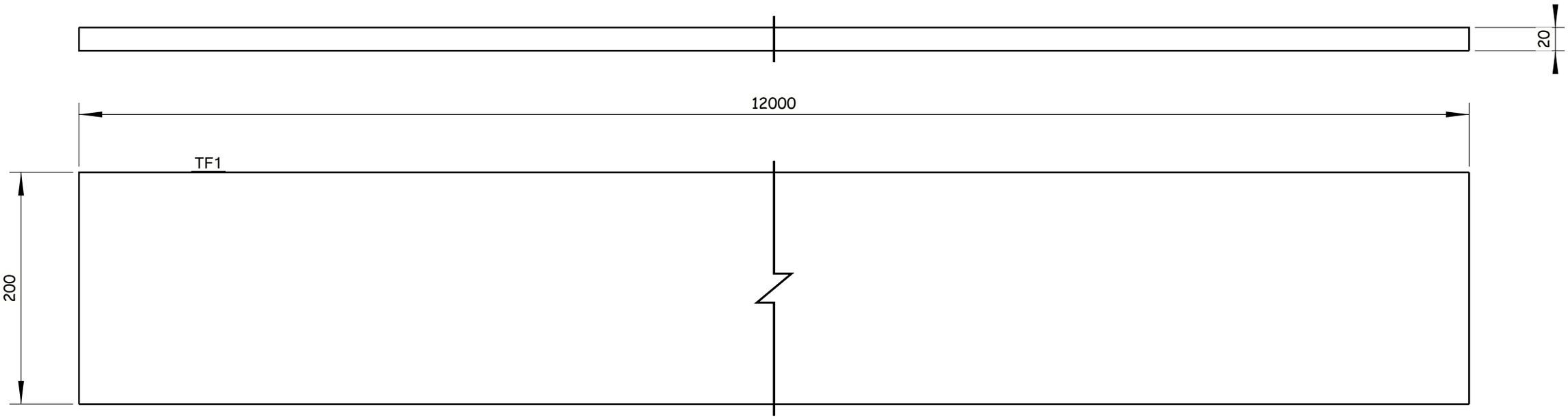


17 Nos. REQUIRED AS DRAWN E.SHTF1

6 October Monorail
Engineering Unit
Valid For Construction

Tekla Structures

GENERAL NOTES:

1. ALL DIMENSIONS ARE IN MILLIMETERS UNLESS OTHERWISE SPECIFIED.
2. LEVELS ARE IN METERS
3. DESIGN SERVICE LIFE OF 100 YEARS.
4. FLANGES OF TOP AND BOTTOM CHORDS TO BE SUPPLIED WITH IMPROVED THROUGH THICKNESS PROPERTIES Z25 ACCORDING TO EN10164.

REFERENCE DRAWINGS

| | |
|---|---|
| 1 | 93M-BOA-NAT-LOT-26612 |
| 2 | |
| 3 | |
| 4 | |
| 5 | |
| 6 | |
| 7 | |
| 8 | |
| 9 | |
| 10 | |
| 11 | |

6TH OF OCTOBER CITY RAIL TRANSIT MONORAIL &
NEW CAPITAL CITY RAIL TRANSIT MONORAIL

The Authority
Hill International
Authority Consultant

ORASCOM CONSTRUCTION
BOMBARDIER
Main Contractor

SENER
SHAKER CONSULTANCY GROUP
Designer

CONTRACTOR / CONSULTANT :
ENGINEERING HOUSE FOR CONSULTANCY

SCALE: AS SHOWN | CHD DRAWING | DATE: 20.11.2024

| REV | DATE | BY | DESCRIPTION | CHK | APD |
|---|---|---|---|---|---|
| A | 20-11-24 | E.SH | ISSUE FOR APPROVAL | A.SH | M.M |

DRAWING TITLE:
6TH OF OCTOBER MONORAIL
**SHOP DRAWING FOR STRADDLE BENT 6OL11-22C2**
**STEEL RAFTER.**
TF1

| Project Code | Rubric | Initiator | Lot | Ref | Number | Revision |
|---|---|---|---|---|---|---|
| 93M | 04 | 07 | ACC | 60L11 | DWG | 90532 | A |

REVIEWED WITH COMMENT
MONORAILS PROJECT

-Drawing shall be updated according to the comments on the GA drawing.
-Approval is subject to approval of coordination package between multi-disciplines.

All holes are 22mm U.N.O  Length & Area & Weight per piece

| Mark | Profile | Grade | QTY | Length | Area | Weight |
|---|---|---|---|---|---|---|
| TF2 | FLT20*200 | S355J2N | 2 | 11044.5 | 4.87 | 346.8 |

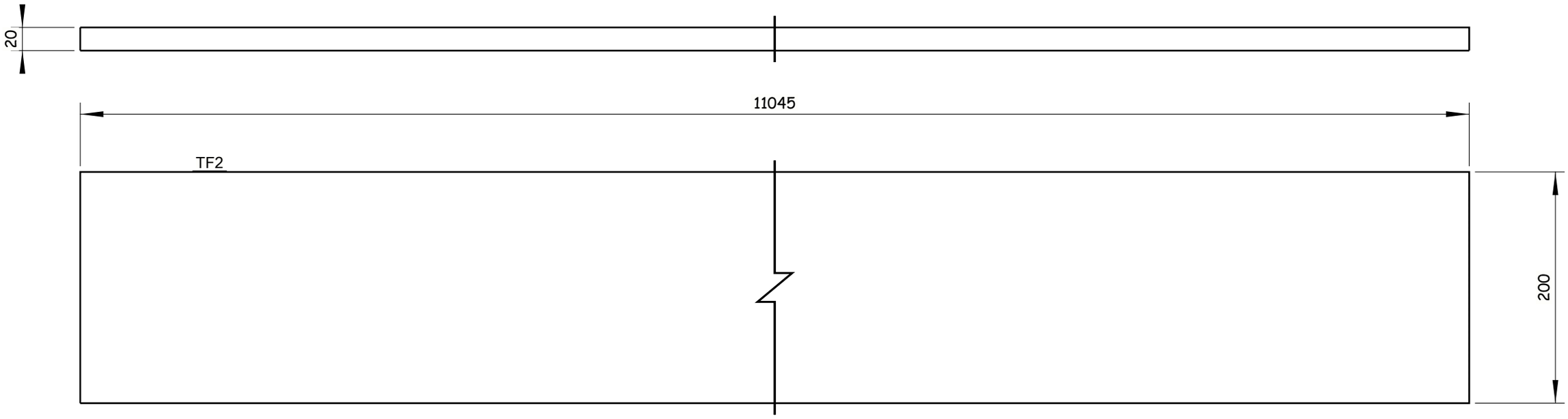


2 Nos. REQUIRED AS DRAWN E.SHTF2

6 October Monorail
Engineering Unit
Valid For Construction

Tekla Structures

GENERAL NOTES:

1. ALL DIMENSIONS ARE IN MILLIMETERS UNLESS OTHERWISE SPECIFIED.
2. LEVELS ARE IN METERS
3. DESIGN SERVICE LIFE OF 100 YEARS.
4. FLANGES OF TOP AND BOTTOM CHORDS TO BE SUPPLIED WITH IMPROVED THROUGH THICKNESS PROPERTIES Z25 ACCORDING TO EN10164.

REFERENCE DRAWINGS

| | |
|---|---|
| 1 | 93M-BOA-NAT-LOT-26612 |
| 2 | |
| 3 | |
| 4 | |
| 5 | |
| 6 | |
| 7 | |
| 8 | |
| 9 | |
| 10 | |
| 11 | |

6TH OF OCTOBER CITY RAIL TRANSIT MONORAIL &
NEW CAPITAL CITY RAIL TRANSIT MONORAIL

The Authority — Hill International Authority Consultant

ORASCOM CONSTRUCTION — BOMBARDIER — Main Contractor

SENER — SHAKER CONSULTANCY GROUP — Designer

CONTRACTOR / CONSULTANT :

ENGINEERING HOUSE FOR CONSULTANCY

SCALE: AS SHOWN | CHD DRAWING | DATE: 20.11.2024

| REV | DATE | BY | DESCRIPTION | CHK | APD |
|---|---|---|---|---|---|
| A | 20-11-24 | E.SH | ISSUE FOR APPROVAL | A.SH | M.M |

DRAWING TITLE:
6TH OF OCTOBER MONORAIL
**SHOP DRAWING FOR STRADDLE BENT 6OL11-22C2**
**STEEL RAFTER.**
TF2

| Project Code | Rubric | Initiator | Lot | Ref | Number | Revision |
|---|---|---|---|---|---|---|
| 93M | 04 | 07 | ACC | 60L11 | DWG | 90533 | A |

REVIEWED WITH COMMENT
MONORAILS PROJECT

-Drawing shall be updated according to the comments on the GA drawing.
-Approval is subject to approval of coordination package between multi-disciplines.

All holes are 22mm U.N.O  Length & Area & Weight per piece

| Mark | Profile | Grade | QTY | Length | Area | Weight |
|---|---|---|---|---|---|---|
| TF3 | FLT20*200 | S355J2N | 9 | 981.0 | 0.44 | 30.8 |

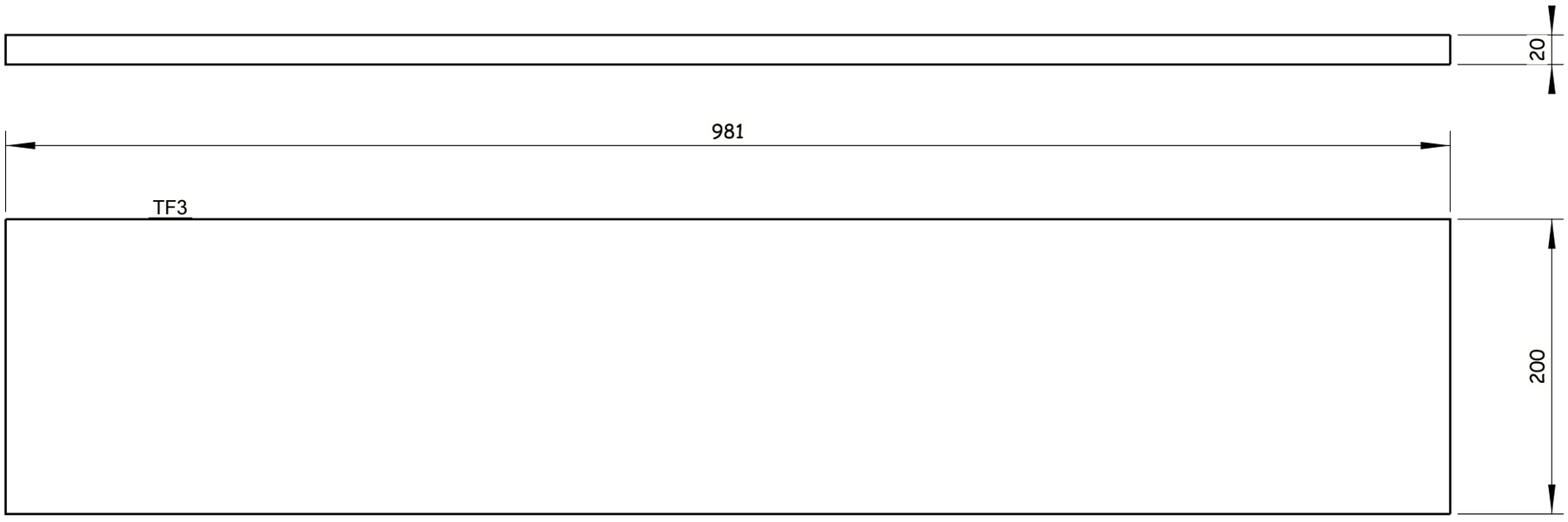


9 Nos. REQUIRED AS DRAWN E.SHTF3

6 October Monorail
Engineering Unit
Valid For Construction

Tekla Structures

GENERAL NOTES:

1. ALL DIMENSIONS ARE IN MILLIMETERS UNLESS OTHERWISE SPECIFIED.
2. LEVELS ARE IN METERS
3. DESIGN SERVICE LIFE OF 100 YEARS.
4. FLANGES OF TOP AND BOTTOM CHORDS TO BE SUPPLIED WITH IMPROVED THROUGH THICKNESS PROPERTIES Z25 ACCORDING TO EN10164.

REFERENCE DRAWINGS

| | |
|---|---|
| 1 | 93M-BOA-NAT-LOT-26612 |
| 2 | |
| 3 | |
| 4 | |
| 5 | |
| 6 | |
| 7 | |
| 8 | |
| 9 | |
| 10 | |
| 11 | |

6TH OF OCTOBER CITY RAIL TRANSIT MONORAIL &
NEW CAPITAL CITY RAIL TRANSIT MONORAIL

The Authority
Hill International
Authority Consultant

ORASCOM CONSTRUCTION
Main Contractor

BOMBARDIER
SENER
SHAKER CONSULTANCY GROUP
Designer

CONTRACTOR / CONSULTANT :
ENGINEERING HOUSE FOR CONSULTANCY

| REV | DATE | BY | DESCRIPTION | CHK | APD |
|---|---|---|---|---|---|
| A | 20-11-24 | E.SH | ISSUE FOR APPROVAL | A.SH | M.M |

SCALE
AS SHOWN

SHD DRAWING

DATE
20.11.2024

DRAWING TITLE:
6TH OF OCTOBER MONORAIL
**SHOP DRAWING FOR STRADDLE BENT 6OL11-22C2**
**STEEL RAFTER.**
TF3

| Project Code | Rubric | Initiator | Lot | Ref | Number | Revision |
|---|---|---|---|---|---|---|
| 93M | 0407 | ACC | 60L11 | DWG | 90534 | A |

REVIEWED WITH COMMENT
MONORAILS PROJECT

-Drawing shall be updated according to the comments on the GA drawing.
-Approval is subject to approval of coordination package between multi-disciplines.

All holes are 22mm U.N.O  Length & Area & Weight per piece

| Mark | Profile | Grade | QTY | Length | Area | Weight |
|---|---|---|---|---|---|---|
| TF4 | FLT20*200 | S355J2N | 8 | 5693.0 | 2.51 | 178.8 |

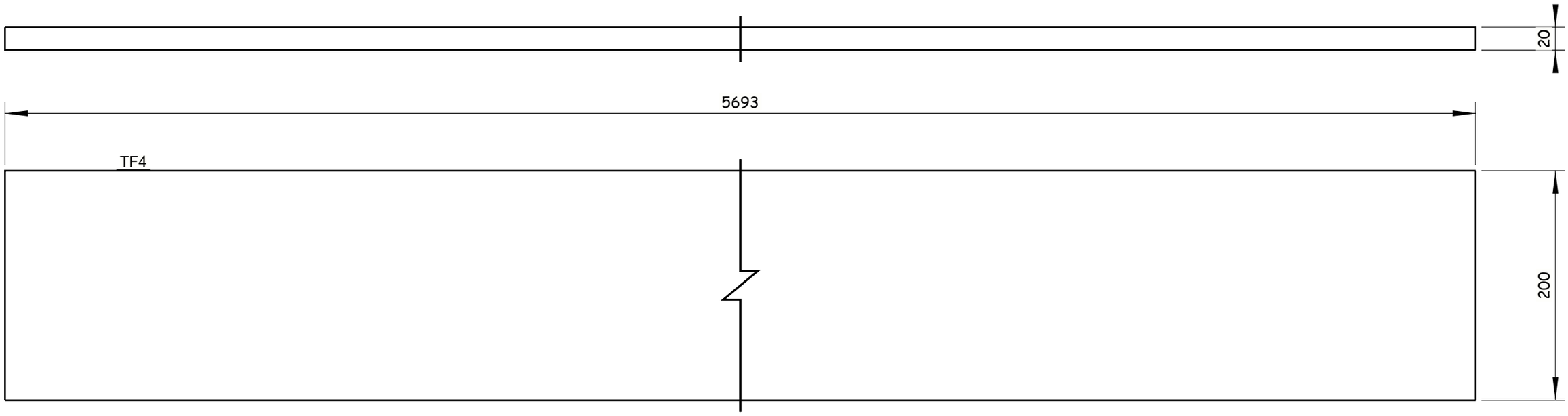


8 Nos. REQUIRED AS DRAWN E.SHTF4

6 October Monorail
Engineering Unit
Valid For Construction

Tekla Structures

GENERAL NOTES:

1. ALL DIMENSIONS ARE IN MILLIMETERS UNLESS OTHERWISE SPECIFIED.
2. LEVELS ARE IN METERS
3. DESIGN SERVICE LIFE OF 100 YEARS.
4. FLANGES OF TOP AND BOTTOM CHORDS TO BE SUPPLIED WITH IMPROVED THROUGH THICKNESS PROPERTIES Z25 ACCORDING TO EN10164.

REFERENCE DRAWINGS

| | |
|---|---|
| 1 | 93M-BOA-NAT-LOT-26612 |
| 2 | |
| 3 | |
| 4 | |
| 5 | |
| 6 | |
| 7 | |
| 8 | |
| 9 | |
| 10 | |
| 11 | |

6TH OF OCTOBER CITY RAIL TRANSIT MONORAIL &
NEW CAPITAL CITY RAIL TRANSIT MONORAIL

The Authority — Hill International Authority Consultant
Main Contractor
Designer

CONTRACTOR / CONSULTANT :
ENGINEERING HOUSE FOR CONSULTANCY

SCALE: AS SHOWN | CHD DRAWING | DATE: 20.11.2024

| REV | DATE | BY | DESCRIPTION | CHK | APD |
|---|---|---|---|---|---|
| A | 20-11-24 | E.SH | ISSUE FOR APPROVAL | A.SH | M.M |

DRAWING TITLE:
6TH OF OCTOBER MONORAIL
**SHOP DRAWING FOR STRADDLE BENT 6OL11-22C2**
**STEEL RAFTER.**
TF4

| Project Code | Rubric | Initiator | Lot | Ref | Number | Revision |
|---|---|---|---|---|---|---|
| 93M | 0407 | ACC | 60L11 | DWG | 90535 | A |

REVIEWED WITH COMMENT
MONORAILS PROJECT

-Drawing shall be updated according to the comments on the GA drawing.
-Approval is subject to approval of coordination package between multi-disciplines.

All holes are 22mm U.N.O  Length & Area & Weight per piece

| Mark | Profile | Grade | QTY | Length | Area | Weight |
|---|---|---|---|---|---|---|
| TF5 | FLT20*200 | S355J2N | 6 | 3894.0 | 1.72 | 122.3 |

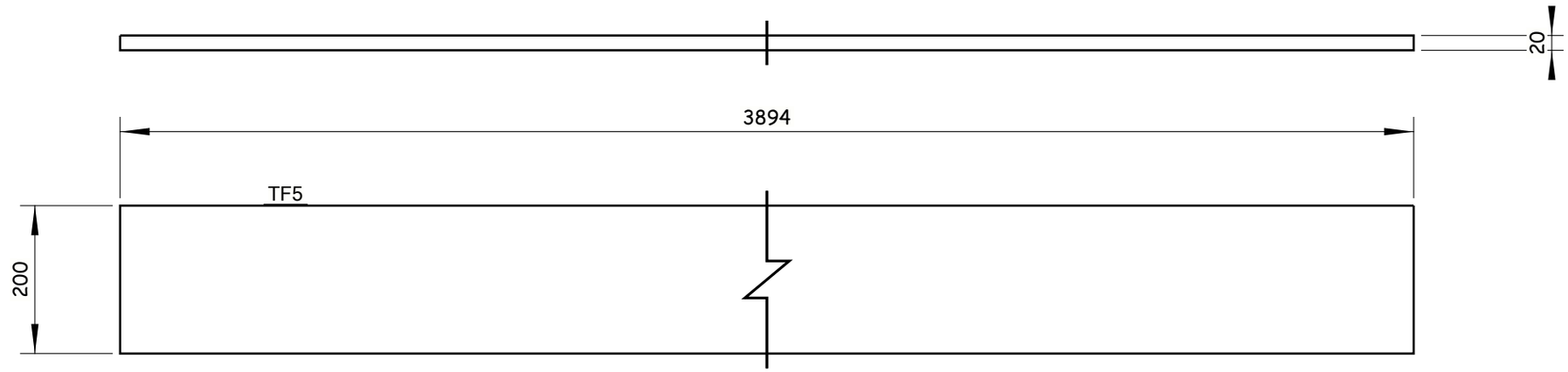


6 Nos. REQUIRED AS DRAWN E.SHTF5

6 October Monorail
Engineering Unit
Valid For Construction

Tekla Structures

GENERAL NOTES:

1. ALL DIMENSIONS ARE IN MILLIMETERS UNLESS OTHERWISE SPECIFIED.
2. LEVELS ARE IN METERS
3. DESIGN SERVICE LIFE OF 100 YEARS.
4. FLANGES OF TOP AND BOTTOM CHORDS TO BE SUPPLIED WITH IMPROVED THROUGH THICKNESS PROPERTIES Z25 ACCORDING TO EN10164.

REFERENCE DRAWINGS

| | |
|---|---|
| 1 | 93M-BOA-NAT-LOT-26612 |
| 2 | |
| 3 | |
| 4 | |
| 5 | |
| 6 | |
| 7 | |
| 8 | |
| 9 | |
| 10 | |
| 11 | |

6TH OF OCTOBER CITY RAIL TRANSIT MONORAIL &
NEW CAPITAL CITY RAIL TRANSIT MONORAIL

The Authority
Hill International
Authority Consultant

ORASCOM CONSTRUCTION
BOMBARDIER
Main Contractor

SENER
SHAKER CONSULTANCY GROUP
Designer

CONTRACTOR / CONSULTANT:
ENGINEERING HOUSE FOR CONSULTANCY

SCALE: AS SHOWN
CHD DRAWING
DATE: 20.11.2024

| REV | DATE | BY | DESCRIPTION | CHK | APD |
|---|---|---|---|---|---|
| A | 20-11-24 | E.SH | ISSUE FOR APPROVAL | A.SH | M.M |

DRAWING TITLE:
6TH OF OCTOBER MONORAIL
**SHOP DRAWING FOR STRADDLE BENT 6OL11-22C2**
**STEEL RAFTER.**
TF5

| Project Code | Rubric | Initiator | Lot | Ref | Number | Revision |
|---|---|---|---|---|---|---|
| 93M | 04 | 07 | ACC | 60L111 | DWG | 90536 | A |

REVIEWED WITH COMMENT
MONORAILS PROJECT

-Drawing shall be updated according to the comments on the GA drawing.
-Approval is subject to approval of coordination package between multi-disciplines.

All holes are 22mm U.N.O  Length & Area & Weight per piece

| Mark | Profile | Grade | QTY | Length | Area | Weight |
|---|---|---|---|---|---|---|
| TF6 | FLT20*200 | S355J2N | 12 | 1680.0 | 0.75 | 52.8 |

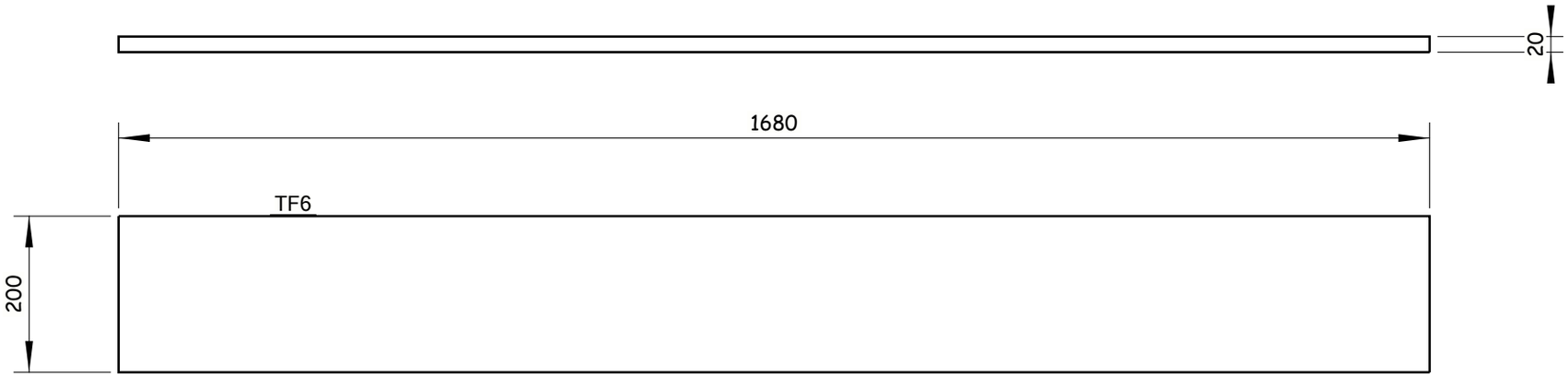


12 Nos. REQUIRED AS DRAWN E.SHTF6

6 October Monorail
Engineering Unit
Valid For Construction

Tekla Structures

GENERAL NOTES:

1. ALL DIMENSIONS ARE IN MILLIMETERS UNLESS OTHERWISE SPECIFIED.
2. LEVELS ARE IN METERS
3. DESIGN SERVICE LIFE OF 100 YEARS.
4. FLANGES OF TOP AND BOTTOM CHORDS TO BE SUPPLIED WITH IMPROVED THROUGH THICKNESS PROPERTIES Z25 ACCORDING TO EN10164.

REFERENCE DRAWINGS

| | |
|---|---|
| 1 | 93M-BOA-NAT-LOT-26612 |
| 2 | |
| 3 | |
| 4 | |
| 5 | |
| 6 | |
| 7 | |
| 8 | |
| 9 | |
| 10 | |
| 11 | |

6TH OF OCTOBER CITY RAIL TRANSIT MONORAIL &
NEW CAPITAL CITY RAIL TRANSIT MONORAIL

The Authority
Hill International
Authority Consultant

ORASCOM CONSTRUCTION
Main Contractor

BOMBARDIER
SENER
SHAKER CONSULTANCY GROUP
Designer

CONTRACTOR / CONSULTANT:
ENGINEERING HOUSE FOR CONSULTANCY

SCALE: AS SHOWN | CHD DRAWING | DATE: 20.11.2024

DRAWING TITLE:
6TH OF OCTOBER MONORAIL
**SHOP DRAWING FOR STRADDLE BENT 6OL11-22C2 STEEL RAFTER.**
TF6

| REV | DATE | BY | DESCRIPTION | CHK | APD |
|---|---|---|---|---|---|
| A | 20-11-24 | E.SH | ISSUE FOR APPROVAL | A.SH | M.M |

| Project Code | Rubric | Initiator | Lot | Ref | Number | Revision |
|---|---|---|---|---|---|---|
| 93M | 0407 | ACC | 60L11 | DWG | 90537 | A |

REVIEWED WITH COMMENT
MONORAILS PROJECT

-Drawing shall be updated according to the comments on the GA drawing.
-Approval is subject to approval of coordination package between multi-disciplines.

All holes are 22mm U.N.O Length & Area & Weight per piece

| Mark | Profile | Grade | QTY | Length | Area | Weight |
|---|---|---|---|---|---|---|
| TF8 | FLT25*250 | S355J2N | 16 | 1919.9 | 1.07 | 94.2 |

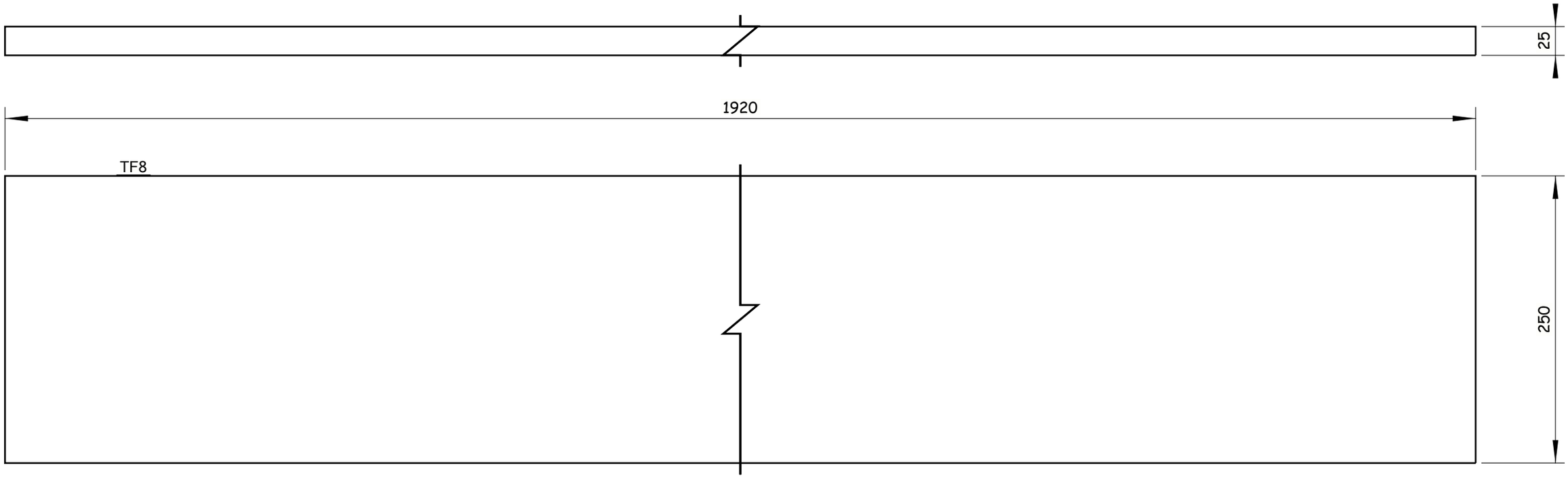


16 Nos. REQUIRED AS DRAWN E.SHTF8

Tekla Structures

GENERAL NOTES:

1. ALL DIMENSIONS ARE IN MILLIMETERS UNLESS OTHERWISE SPECIFIED.
2. LEVELS ARE IN METERS
3. DESIGN SERVICE LIFE OF 100 YEARS.
4. FLANGES OF TOP AND BOTTOM CHORDS TO BE SUPPLIED WITH IMPROVED THROUGH THICKNESS PROPERTIES Z25 ACCORDING TO EN10164.

REFERENCE DRAWINGS

| | |
|---|---|
| 1 | 93M-BOA-NAT-LOT-26612 |
| 2 | |
| 3 | |
| 4 | |
| 5 | |
| 6 | |
| 7 | |
| 8 | |
| 9 | |
| 10 | |
| 11 | |

6TH OF OCTOBER CITY RAIL TRANSIT MONORAIL &
NEW CAPITAL CITY RAIL TRANSIT MONORAIL

The Authority
Authority Consultant
Main Contractor
Designer

CONTRACTOR CONSULTANT:
ENGINEERING HOUSE FOR CONSULTANCY

6 October Monorail
Engineering Unit
Valid For Construction

| SCALE | SHOP DRAWING | DATE |
|---|---|---|
| AS SHOWN | | 20.11.2024 |

| REV | DATE | BY | DESCRIPTION | CHK | APD |
|---|---|---|---|---|---|
| A | 20-11-24 | E.SH | ISSUE FOR APPROVAL | A.SH | M.M |

DRAWING TITLE:
6TH OF OCTOBER MONORAIL
**SHOP DRAWING FOR STRADDLE BENT 6OL11-22C2**
**STEEL RAFTER.**
TF8

| Project Code | Rubric | Initiator | Lot | Ref | Number | Revision |
|---|---|---|---|---|---|---|
| 93 | M0407 | ACC | 60L11 | DWG | 90538 | A |

REVIEWED WITH COMMENT
MONORAILS PROJECT

-Drawing shall be updated according to the comments on the GA drawing.
-Approval is subject to approval of coordination package between multi-disciplines.

All holes are 22mm U.N.O  Length & Area & Weight per piece

| Mark | Profile | Grade | QTY | Length | Area | Weight |
|---|---|---|---|---|---|---|
| TF9 | FLT20*200 | S355J2N | 4 | 1507.2 | 0.64 | 45.4 |

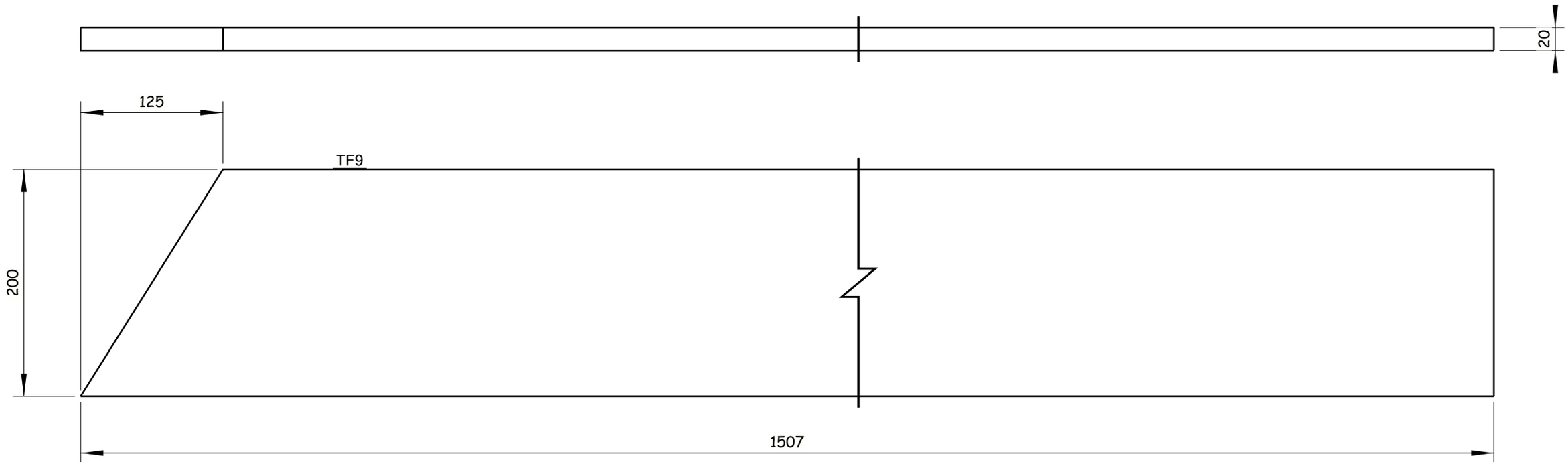


4 Nos. REQUIRED AS DRAWN E.SHTF9

6 October Monorail
Engineering Unit
Valid For Construction

Tekla Structures

GENERAL NOTES:

1. ALL DIMENSIONS ARE IN MILLIMETERS UNLESS OTHERWISE SPECIFIED.
2. LEVELS ARE IN METERS
3. DESIGN SERVICE LIFE OF 100 YEARS.
4. FLANGES OF TOP AND BOTTOM CHORDS TO BE SUPPLIED WITH IMPROVED THROUGH THICKNESS PROPERTIES Z25 ACCORDING TO EN10164.

REFERENCE DRAWINGS

| | |
|---|---|
| 1 | 93M-BOA-NAT-LOT-26612 |
| 2 | |
| 3 | |
| 4 | |
| 5 | |
| 6 | |
| 7 | |
| 8 | |
| 9 | |
| 10 | |
| 11 | |

6TH OF OCTOBER CITY RAIL TRANSIT MONORAIL &
NEW CAPITAL CITY RAIL TRANSIT MONORAIL

The Authority
Hill International
Authority Consultant

ORASCOM CONSTRUCTION
BOMBARDIER
Main Contractor

SENER
SHAKER CONSULTANCY GROUP
Designer

CONTRACTOR / CONSULTANT :
ENGINEERING HOUSE FOR CONSULTANCY

SCALE: AS SHOWN | CHD DRAWING | DATE: 20.11.2024

| REV | DATE | BY | DESCRIPTION | CHK | APD |
|---|---|---|---|---|---|
| A | 20-11-24 | E.SH | ISSUE FOR APPROVAL | A.SH | M.M |

DRAWING TITLE:
6TH OF OCTOBER MONORAIL
**SHOP DRAWING FOR STRADDLE BENT 6OL11-22C2**
**STEEL RAFTER.**
TF9

| Project Code | Rubric | Initiator | Lot | Ref | Number | Revision |
|---|---|---|---|---|---|---|
| 93M | 04 07 | ACC | 60L11 | DWG | 90539 | A |

REVIEWED WITH COMMENT
MONORAILS PROJECT

-Drawing shall be updated according to the comments on the GA drawing.
-Approval is subject to approval of coordination package between multi-disciplines.

All holes are 22mm U.N.O  Length & Area & Weight per piece

| Mark | Profile | Grade | QTY | Length | Area | Weight |
|---|---|---|---|---|---|---|
| TF10 | FLT20*200 | S355J2N | 4 | 1006.1 | 0.42 | 29.6 |

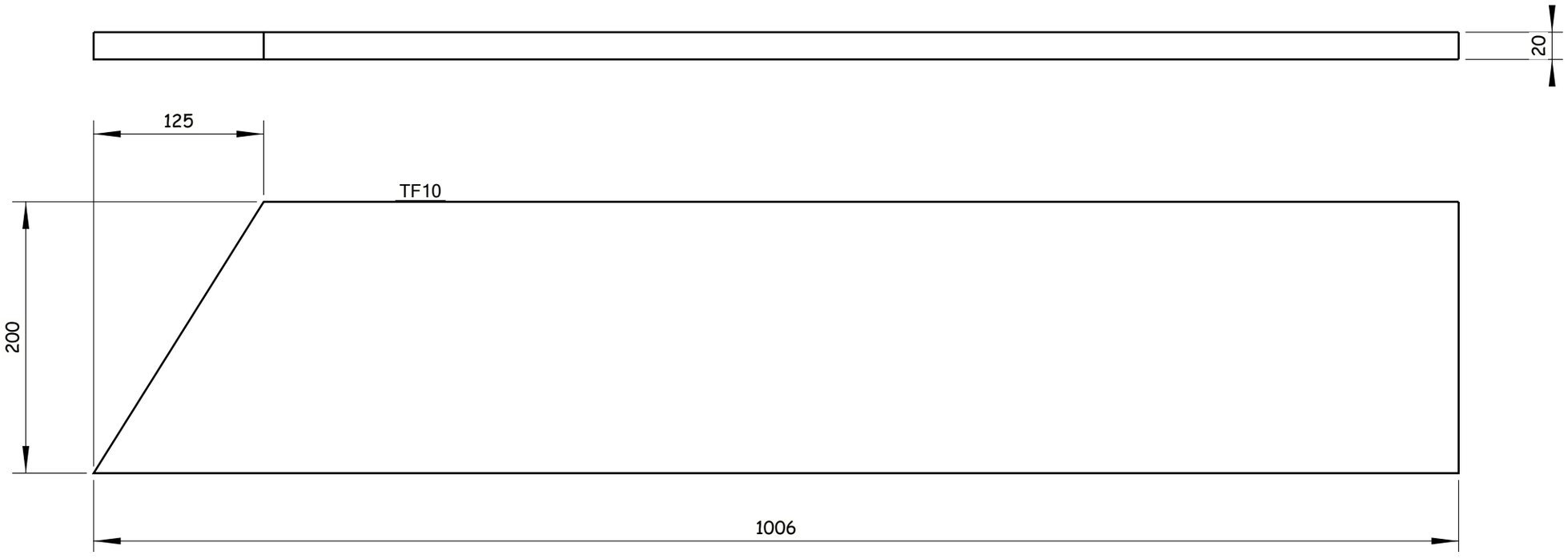


4 Nos. REQUIRED AS DRAWN E.SHTF10

6 October Monorail
Engineering Unit
Valid For Construction

Tekla Structures

GENERAL NOTES:

1. ALL DIMENSIONS ARE IN MILLIMETERS UNLESS OTHERWISE SPECIFIED.
2. LEVELS ARE IN METERS
3. DESIGN SERVICE LIFE OF 100 YEARS.
4. FLANGES OF TOP AND BOTTOM CHORDS TO BE SUPPLIED WITH IMPROVED THROUGH THICKNESS PROPERTIES Z25 ACCORDING TO EN10164.

REFERENCE DRAWINGS

| | |
|---|---|
| 1 | 93M-BOA-NAT-LOT-26612 |
| 2 | |
| 3 | |
| 4 | |
| 5 | |
| 6 | |
| 7 | |
| 8 | |
| 9 | |
| 10 | |
| 11 | |

6TH OF OCTOBER CITY RAIL TRANSIT MONORAIL &
NEW CAPITAL CITY RAIL TRANSIT MONORAIL

The Authority
Hill International
Authority Consultant

ORASCOM CONSTRUCTION
BOMBARDIER
Main Contractor

SENER
SHAKER CONSULTANCY GROUP
Designer

CONTRACTOR / CONSULTANT :
ENGINEERING HOUSE FOR CONSULTANCY

SCALE: AS SHOWN | CHD DRAWING | DATE: 20.11.2024

| REV | DATE | BY | DESCRIPTION | CHK | APD |
|---|---|---|---|---|---|
| A | 20-11-24 | E.SH | ISSUE FOR APPROVAL | A.SH | M.M |

DRAWING TITLE:
6TH OF OCTOBER MONORAIL
**SHOP DRAWING FOR STRADDLE BENT 6OL11-22C2**
**STEEL RAFTER.**
TF10

| Project Code | Rubric | Initiator | Lot | Ref | Number | Revision |
|---|---|---|---|---|---|---|
| 93 | M0407 | ACC | 60L11 | DWG | 90540 | A |

REVIEWED WITH COMMENT
MONORAILS PROJECT

-Drawing shall be updated according to the comments on the GA drawing.
-Approval is subject to approval of coordination package between multi-disciplines.

All holes are 22mm U.N.O  Length & Area & Weight per piece

| Mark | Profile | Grade | QTY | Length | Area | Weight |
|---|---|---|---|---|---|---|
| TF11 | FLT20*200 | S355J2N | 4 | 1002.1 | 0.42 | 29.5 |

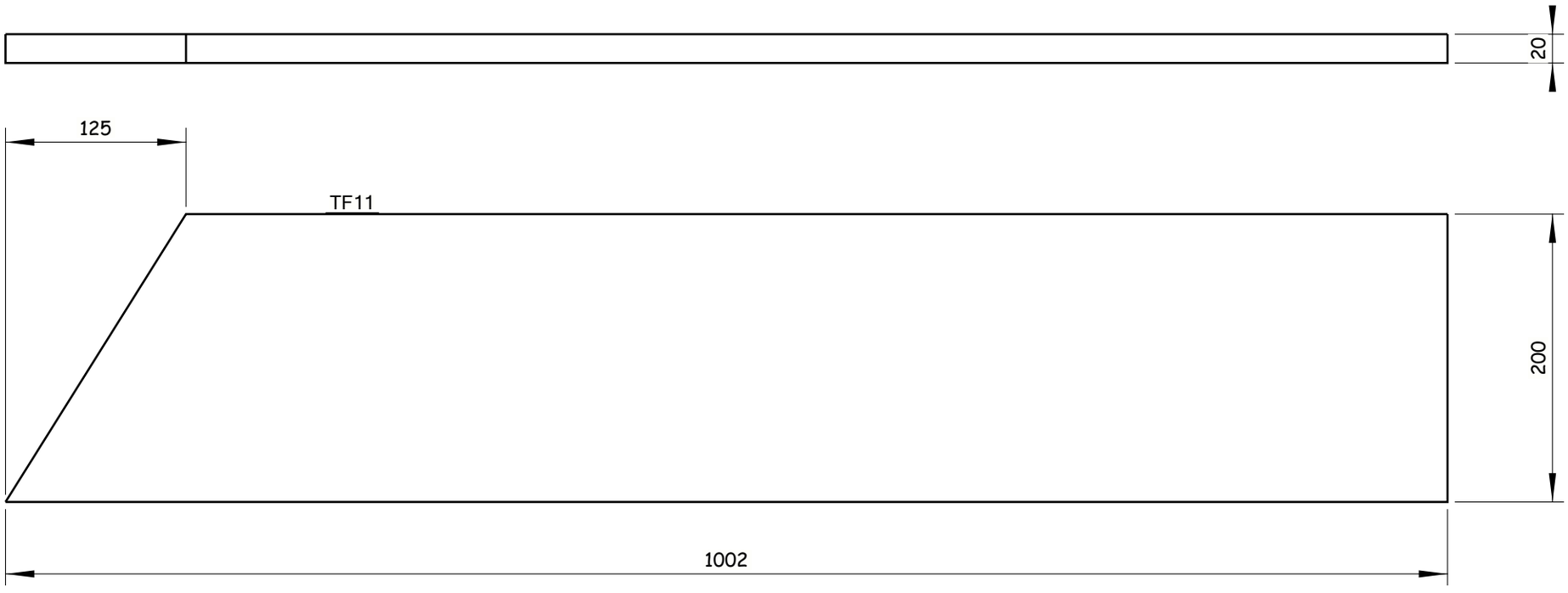


4 Nos. REQUIRED AS DRAWN E.SHTF11

6 October Monorail
Engineering Unit
Valid For Construction

Tekla Structures

GENERAL NOTES:

1. ALL DIMENSIONS ARE IN MILLIMETERS UNLESS OTHERWISE SPECIFIED.
2. LEVELS ARE IN METERS
3. DESIGN SERVICE LIFE OF 100 YEARS.
4. FLANGES OF TOP AND BOTTOM CHORDS TO BE SUPPLIED WITH IMPROVED THROUGH THICKNESS PROPERTIES Z25 ACCORDING TO EN10164.

REFERENCE DRAWINGS

| | |
|---|---|
| 1 | 93M-BOA-NAT-LOT-26612 |
| 2 | |
| 3 | |
| 4 | |
| 5 | |
| 6 | |
| 7 | |
| 8 | |
| 9 | |
| 10 | |
| 11 | |

6TH OF OCTOBER CITY RAIL TRANSIT MONORAIL &
NEW CAPITAL CITY RAIL TRANSIT MONORAIL

The Authority
Hill International
Authority Consultant

ORASCOM CONSTRUCTION
BOMBARDIER
Main Contractor

SENER
SHAKER CONSULTANCY GROUP
Designer

CONTRACTOR / CONSULTANT :
ENGINEERING HOUSE FOR CONSULTANCY

SCALE: AS SHOWN | CHD DRAWING | DATE 20.11.2024

| REV | DATE | BY | DESCRIPTION | CHK | APD |
|---|---|---|---|---|---|
| A | 20-11-24 | E.SH | ISSUE FOR APPROVAL | A.SH | M.M |

DRAWING TITLE:
6TH OF OCTOBER MONORAIL
**SHOP DRAWING FOR STRADDLE BENT 6OL11-22C2**
**STEEL RAFTER.**
TF11

| Project Code | Rubric | Initiator | Lot | Ref | Number | Revision |
|---|---|---|---|---|---|---|
| 93M | 0407 | ACC | 60L11 | DWG | 90541 | A |

REVIEWED WITH COMMENT
MONORAILS PROJECT

-Drawing shall be updated according to the comments on the GA drawing.
-Approval is subject to approval of coordination package between multi-disciplines.

All holes are 22mm U.N.O  Length & Area & Weight per piece

| Mark | Profile | Grade | QTY | Length | Area | Weight |
|---|---|---|---|---|---|---|
| TF12 | FLT20*200 | S355J2N | 4 | 1503.1 | 0.64 | 45.2 |

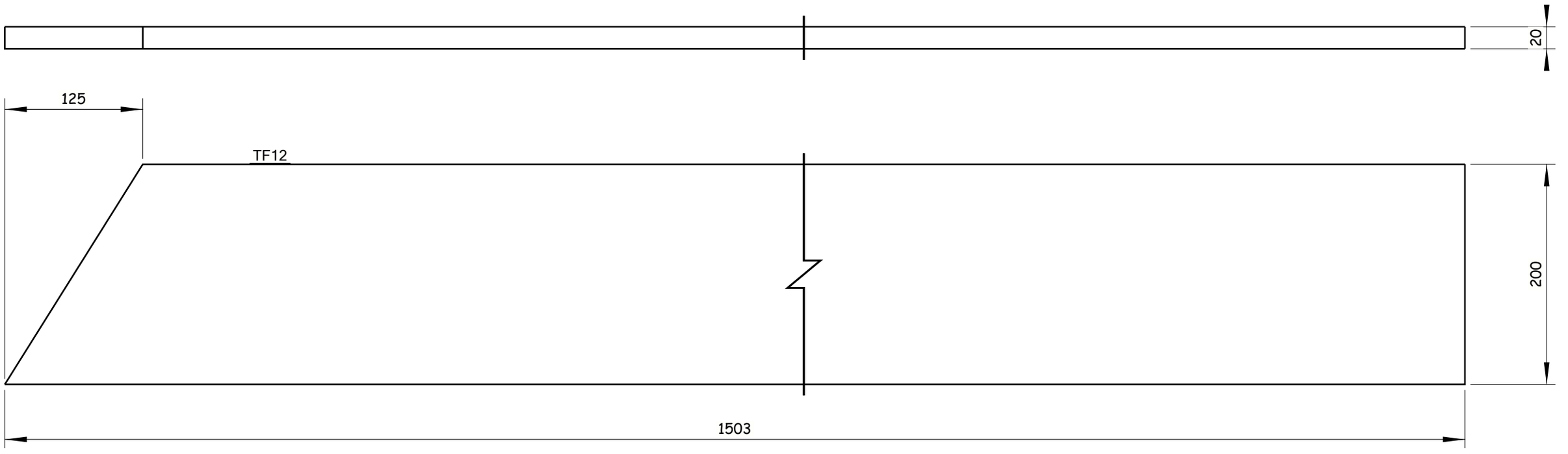


4 Nos. REQUIRED AS DRAWN E.SHTF12

6 October Monorail
Engineering Unit
Valid For Construction

GENERAL NOTES:

1. ALL DIMENSIONS ARE IN MILLIMETERS UNLESS OTHERWISE SPECIFIED.
2. LEVELS ARE IN METERS
3. DESIGN SERVICE LIFE OF 100 YEARS.
4. FLANGES OF TOP AND BOTTOM CHORDS TO BE SUPPLIED WITH IMPROVED THROUGH THICKNESS PROPERTIES Z25 ACCORDING TO EN10164.

REFERENCE DRAWINGS

| | |
|---|---|
| 1 | 93M-BOA-NAT-LOT-26612 |
| 2 | |
| 3 | |
| 4 | |
| 5 | |
| 6 | |
| 7 | |
| 8 | |
| 9 | |
| 10 | |
| 11 | |

6TH OF OCTOBER CITY RAIL TRANSIT MONORAIL &
NEW CAPITAL CITY RAIL TRANSIT MONORAIL

The Authority — Hill International Authority Consultant

Main Contractor: ORASCOM CONSTRUCTION / BOMBARDIER

Designer: SENER / SHAKER CONSULTANCY GROUP

CONTRACTOR / CONSULTANT :

ENGINEERING HOUSE FOR CONSULTANCY

SCALE: AS SHOWN | CHD DRAWING | DATE: 20.11.2024

| REV | DATE | BY | DESCRIPTION | CHK | APD |
|---|---|---|---|---|---|
| A | 20-11-24 | E.SH | ISSUE FOR APPROVAL | A.SH | M.M |

DRAWING TITLE:
6TH OF OCTOBER MONORAIL
**SHOP DRAWING FOR STRADDLE BENT 6OL11-22C2**
**STEEL RAFTER.**
TF12

| Project Code | Rubric | Initiator | Lot | Ref | Number | Revision |
|---|---|---|---|---|---|---|
| 93M | 0407 | ACC | 60L11 | DWG | 90542 | A |

Tekla Structures

REVIEWED WITH COMMENT
MONORAILS PROJECT

-Drawing shall be updated according to the comments on the GA drawing.
-Approval is subject to approval of coordination package between multi-disciplines.

All holes are 22mm U.N.O Length & Area & Weight per piece

| Mark | Profile | Grade | QTY | Length | Area | Weight |
|---|---|---|---|---|---|---|
| TF13 | FLT20*200 | S355J2N | 4 | 505.1 | 0.20 | 13.9 |

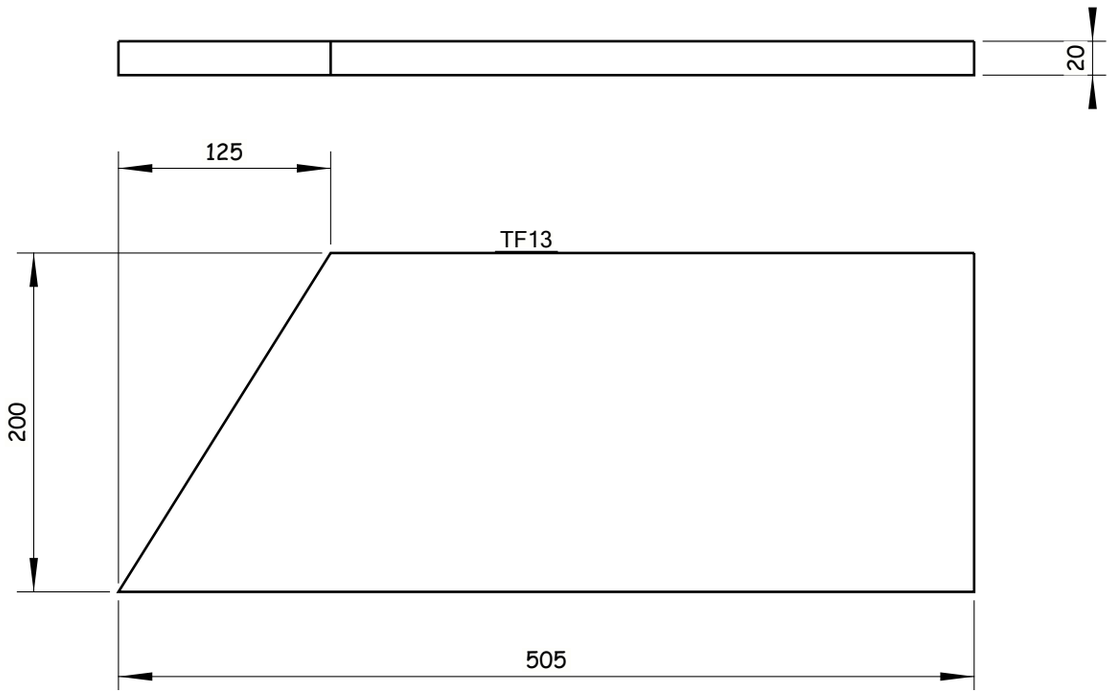


4 Nos. REQUIRED AS DRAWN E.SHTF13

6 October Monorail
Engineering Unit
Valid For Construction

Tekla Structures

GENERAL NOTES:

1. ALL DIMENSIONS ARE IN MILLIMETERS UNLESS OTHERWISE SPECIFIED.
2. LEVELS ARE IN METERS
3. DESIGN SERVICE LIFE OF 100 YEARS.
4. FLANGES OF TOP AND BOTTOM CHORDS TO BE SUPPLIED WITH IMPROVED THROUGH THICKNESS PROPERTIES Z25 ACCORDING TO EN10164.

REFERENCE DRAWINGS

| | |
|---|---|
| 1 | 93M-BOA-NAT-LOT-26612 |
| 2 | |
| 3 | |
| 4 | |
| 5 | |
| 6 | |
| 7 | |
| 8 | |
| 9 | |
| 10 | |
| 11 | |

6TH OF OCTOBER CITY RAIL TRANSIT MONORAIL &
NEW CAPITAL CITY RAIL TRANSIT MONORAIL

The Authority
Hill International
Authority Consultant

ORASCOM CONSTRUCTION
BOMBARDIER
Main Contractor

SENER
SHAKER CONSULTANCY GROUP
Designer

CONTRACTOR / CONSULTANT :
ENGINEERING HOUSE FOR CONSULTANCY

SCALE: AS SHOWN | SHD DRAWING | DATE: 20.11.2024

| REV | DATE | BY | DESCRIPTION | CHK | APD |
|---|---|---|---|---|---|
| A | 20-11-24 | E.SH | ISSUE FOR APPROVAL | A.SH | M.M |

DRAWING TITLE:
6TH OF OCTOBER MONORAIL
**SHOP DRAWING FOR STRADDLE BENT 6OL11-22C2**
**STEEL RAFTER.**
TF13

| Project Code | Rubric | Initiator | Lot | Ref | Number | Revision |
|---|---|---|---|---|---|---|
| 93M | 0407 | ACC | 60L11 | DWG | 90543 | A |

REVIEWED WITH COMMENT
MONORAILS PROJECT

-Drawing shall be updated according to the comments on the GA drawing.
-Approval is subject to approval of coordination package between multi-disciplines.

All holes are 22mm U.N.O Length & Area & Weight per piece

| Mark | Profile | Grade | QTY | Length | Area | Weight |
|---|---|---|---|---|---|---|
| TF14 | FLT20*200 | S355J2N | 4 | 1190.1 | 0.53 | 37.4 |

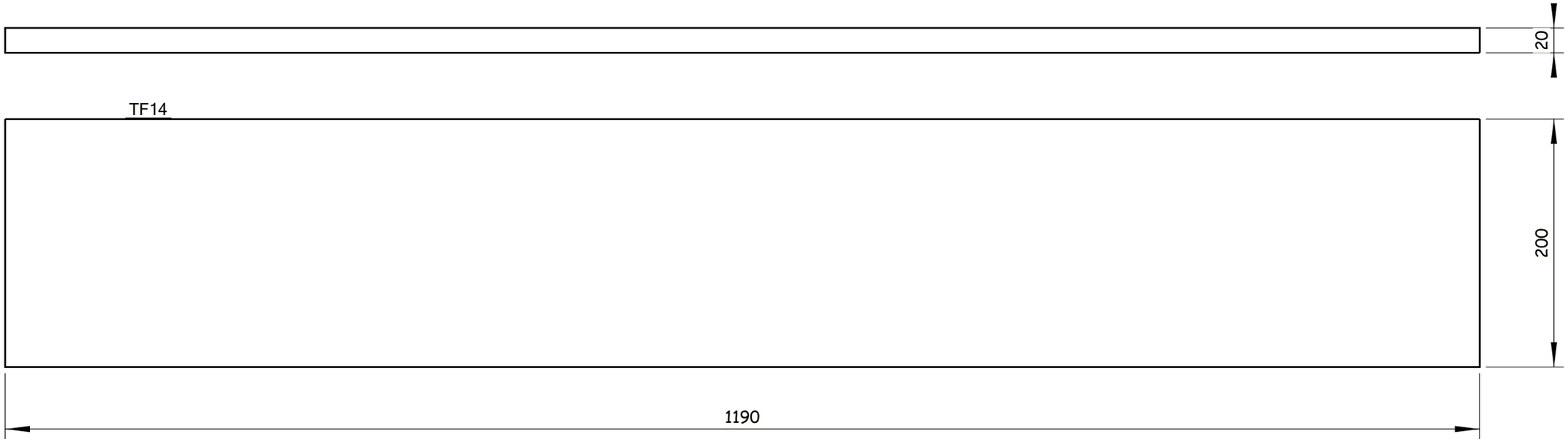


4 Nos. REQUIRED AS DRAWN E.SHTF14

Tekla Structures

GENERAL NOTES:

1. ALL DIMENSIONS ARE IN MILLIMETERS UNLESS OTHERWISE SPECIFIED.
2. LEVELS ARE IN METERS
3. DESIGN SERVICE LIFE OF 100 YEARS.
4. FLANGES OF TOP AND BOTTOM CHORDS TO BE SUPPLIED WITH IMPROVED THROUGH THICKNESS PROPERTIES Z25 ACCORDING TO EN10164.

REFERENCE DRAWINGS

| | |
|---|---|
| 1 | 93M-BOA-NAT-LOT-26612 |
| 2 | |
| 3 | |
| 4 | |
| 5 | |
| 6 | |
| 7 | |
| 8 | |
| 9 | |
| 10 | |
| 11 | |

6TH OF OCTOBER CITY RAIL TRANSIT MONORAIL &
NEW CAPITAL CITY RAIL TRANSIT MONORAIL

The Authority
Hill International
Authority Consultant

ORASCOM CONSTRUCTION
Main Contractor

BOMBARDIER
SENER
SHAKER CONSULTANCY GROUP
Designer

CONTRACTOR / CONSULTANT:
ENGINEERING HOUSE FOR CONSULTANCY

6 October Monorail
Engineering Unit
Valid For Construction

| SCALE | SHOP DRAWING | DATE |
|---|---|---|
| AS SHOWN | | 20.11.2024 |

| REV | DATE | BY | DESCRIPTION | CHK | APD |
|---|---|---|---|---|---|
| A | 20-11-24 | E.SH | ISSUE FOR APPROVAL | A.SH | M.M |

DRAWING TITLE:
6TH OF OCTOBER MONORAIL
**SHOP DRAWING FOR STRADDLE BENT 6OL11-22C2**
**STEEL RAFTER.**
TF14

| Project Code | Rubric | Initiator | Lot | Ref | Number | Revision |
|---|---|---|---|---|---|---|
| 93 | M0407 | ACC | 60L11 | DWG | 90544 | A |

REVIEWED WITH COMMENT
MONORAILS PROJECT

-Drawing shall be updated according to the comments on the GA drawing.
-Approval is subject to approval of coordination package between multi-disciplines.

All holes are 22mm U.N.O  Length & Area & Weight per piece

| Mark | Profile | Grade | QTY | Length | Area | Weight |
|---|---|---|---|---|---|---|
| TF15 | FLT20*200 | S355J2N | 4 | 1198.4 | 0.53 | 37.4 |

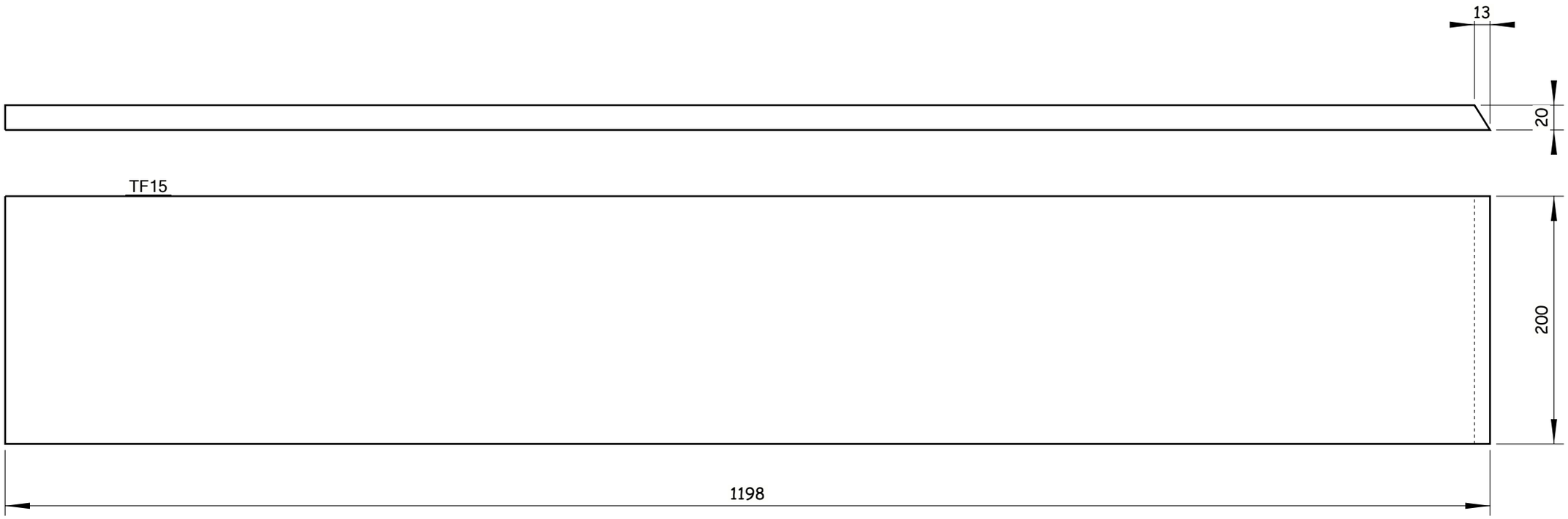


4 Nos. REQUIRED AS DRAWN E.SHTF15

Tekla Structures

GENERAL NOTES:

1. ALL DIMENSIONS ARE IN MILLIMETERS UNLESS OTHERWISE SPECIFIED.
2. LEVELS ARE IN METERS
3. DESIGN SERVICE LIFE OF 100 YEARS.
4. FLANGES OF TOP AND BOTTOM CHORDS TO BE SUPPLIED WITH IMPROVED THROUGH THICKNESS PROPERTIES Z25 ACCORDING TO EN10164.

REFERENCE DRAWINGS

| | |
|---|---|
| 1 | 93M-BOA-NAT-LOT-26612 |
| 2 | |
| 3 | |
| 4 | |
| 5 | |
| 6 | |
| 7 | |
| 8 | |
| 9 | |
| 10 | |
| 11 | |

6TH OF OCTOBER CITY RAIL TRANSIT MONORAIL &
NEW CAPITAL CITY RAIL TRANSIT MONORAIL

The Authority
Hill International
Authority Consultant

ORASCOM CONSTRUCTION
BOMBARDIER
Main Contractor

SENER
SHAKER CONSULTANCY GROUP
Designer

CONTRACTOR:
CONSULTANT:
ENGINEERING HOUSE FOR CONSULTANCY

6 October Monorail
Engineering Unit
Valid For Construction

| SCALE | CHD DRAWING | DATE |
|---|---|---|
| AS SHOWN | | 20.11.2024 |

| REV | DATE | BY | DESCRIPTION | CHK | APD |
|---|---|---|---|---|---|
| A | 20-11-24 | E.SH | ISSUE FOR APPROVAL | A.SH | M.M |

DRAWING TITLE:
6TH OF OCTOBER MONORAIL
**SHOP DRAWING FOR STRADDLE BENT 6OL11-22C2**
**STEEL RAFTER.**
TF15

| Project Code | Rubric | Initiator | Lot | Ref | Number | Revision |
|---|---|---|---|---|---|---|
| 93M | 04 07 | ACC | 60L111 | DWG | 90545 | A |

REVIEWED WITH COMMENT
MONORAILS PROJECT

-Drawing shall be updated according to the comments on the GA drawing.
-Approval is subject to approval of coordination package between multi-disciplines.

All holes are 22mm U.N.O  Length & Area & Weight per piece

| Mark | Profile | Grade | QTY | Length | Area | Weight |
|---|---|---|---|---|---|---|
| TF16 | FLT25*250 | S355J2N | 4 | 2595.8 | 1.44 | 127.3 |

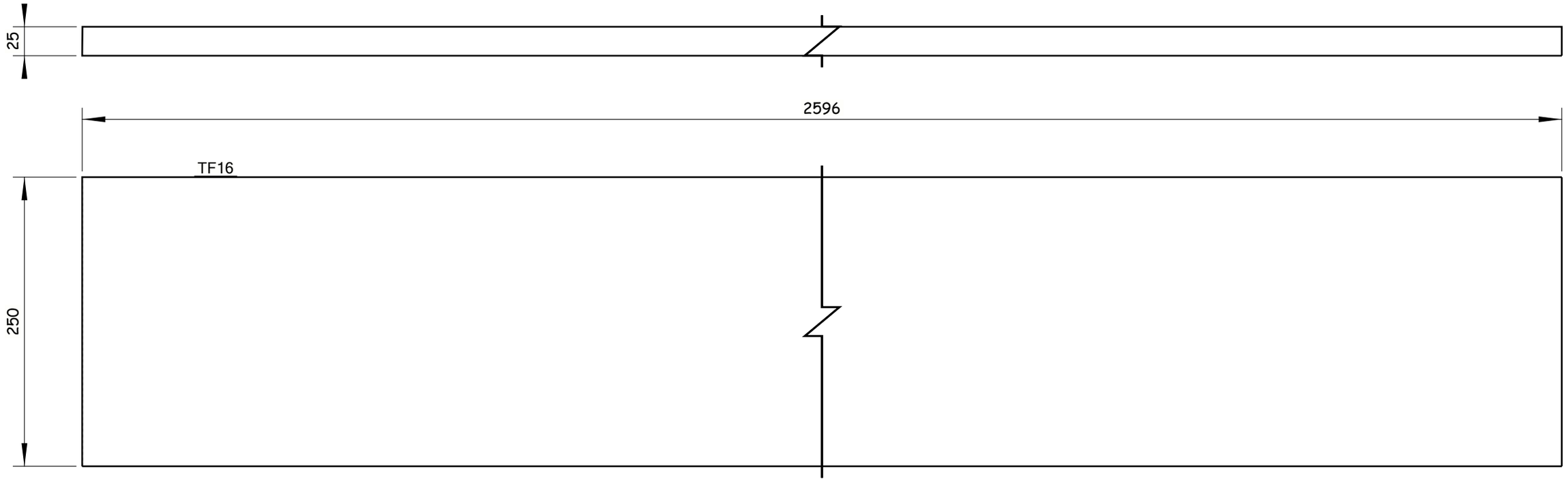


4 Nos. REQUIRED AS DRAWN E.SHTF16

Tekla Structures

GENERAL NOTES:

1. ALL DIMENSIONS ARE IN MILLIMETERS UNLESS OTHERWISE SPECIFIED.
2. LEVELS ARE IN METERS
3. DESIGN SERVICE LIFE OF 100 YEARS.
4. FLANGES OF TOP AND BOTTOM CHORDS TO BE SUPPLIED WITH IMPROVED THROUGH THICKNESS PROPERTIES Z25 ACCORDING TO EN10164.

REFERENCE DRAWINGS

| | |
|---|---|
| 1 | 93M-BOA-NAT-LOT-26612 |
| 2 | |
| 3 | |
| 4 | |
| 5 | |
| 6 | |
| 7 | |
| 8 | |
| 9 | |
| 10 | |
| 11 | |

6TH OF OCTOBER CITY RAIL TRANSIT MONORAIL &
NEW CAPITAL CITY RAIL TRANSIT MONORAIL

The Authority
Hill International
Authority Consultant

ORASCOM CONSTRUCTION
Main Contractor

BOMBARDIER
SENER
SHAKER CONSULTANCY GROUP
Designer

CONTRACTOR / CONSULTANT:
ENGINEERING HOUSE FOR CONSULTANCY

6 October Monorail
Engineering Unit
Valid For Construction

| SCALE | SHOP DRAWING | DATE |
|---|---|---|
| AS SHOWN | | 20.11.2024 |

| REV | DATE | BY | DESCRIPTION | CHK | APD |
|---|---|---|---|---|---|
| A | 20-11-24 | E.SH | ISSUE FOR APPROVAL | A.SH | M.M |

DRAWING TITLE:
6TH OF OCTOBER MONORAIL
**SHOP DRAWING FOR STRADDLE BENT 6OL11-22C2**
**STEEL RAFTER.**
TF16

| Project Code | Rubric | Initiator | Lot | Ref | Number | Revision |
|---|---|---|---|---|---|---|
| 93M | 0407 | ACC | 60L11 | DWG | 90546 | A |

REVIEWED WITH COMMENT
MONORAILS PROJECT

-Drawing shall be updated according to the comments on the GA drawing.
-Approval is subject to approval of coordination package between multi-disciplines.

All holes are 22mm U.N.O  Length & Area & Weight per piece

| Mark | Profile | Grade | QTY | Length | Area | Weight |
|---|---|---|---|---|---|---|
| TF17 | FLT25*250 | S355J2N | 4 | 2602.8 | 1.44 | 127.7 |

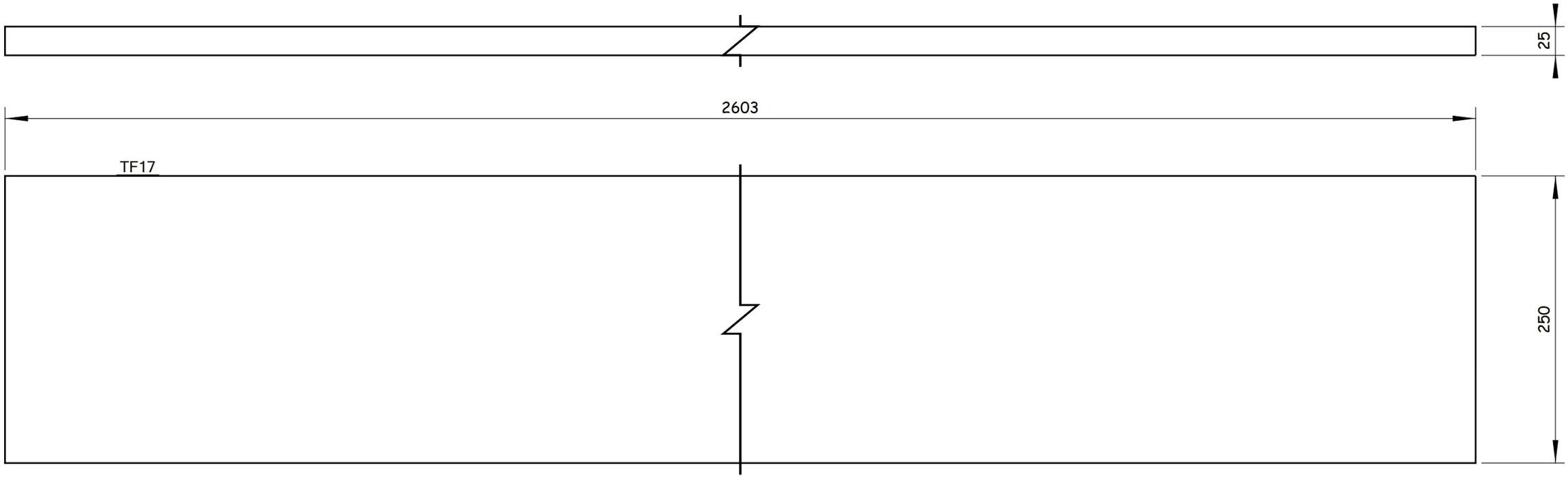


4 Nos. REQUIRED AS DRAWN E.SHTF17

Tekla Structures

GENERAL NOTES:

1. ALL DIMENSIONS ARE IN MILLIMETERS UNLESS OTHERWISE SPECIFIED.
2. LEVELS ARE IN METERS
3. DESIGN SERVICE LIFE OF 100 YEARS.
4. FLANGES OF TOP AND BOTTOM CHORDS TO BE SUPPLIED WITH IMPROVED THROUGH THICKNESS PROPERTIES Z25 ACCORDING TO EN10164.

REFERENCE DRAWINGS

| | |
|---|---|
| 1 | 93M-BOA-NAT-LOT-26612 |
| 2 | |
| 3 | |
| 4 | |
| 5 | |
| 6 | |
| 7 | |
| 8 | |
| 9 | |
| 10 | |
| 11 | |

6TH OF OCTOBER CITY RAIL TRANSIT MONORAIL &
NEW CAPITAL CITY RAIL TRANSIT MONORAIL

The Authority
Authority Consultant
Main Contractor
Designer

CONTRACTOR / CONSULTANT:
ENGINEERING HOUSE FOR CONSULTANCY

6 October Monorail
Engineering Unit
Valid For Construction

| SCALE | SHOP DRAWING | DATE |
|---|---|---|
| AS SHOWN | | 20.11.2024 |

| REV | DATE | BY | DESCRIPTION | CHK | APD |
|---|---|---|---|---|---|
| A | 20-11-24 | E.SH | ISSUE FOR APPROVAL | A.SH | M.M |

DRAWING TITLE:
6TH OF OCTOBER MONORAIL
**SHOP DRAWING FOR STRADDLE BENT 6OL11-22C2**
**STEEL RAFTER.**
TF17

| Project Code | Rubric | Initiator | Lot | Ref | Number | Revision |
|---|---|---|---|---|---|---|
| 93M | 0407 | ACC | 60L11 | DWG | 90547 | A |

REVIEWED WITH COMMENT
MONORAILS PROJECT

-Drawing shall be updated according to the comments on the GA drawing.
-Approval is subject to approval of coordination package between multi-disciplines.

All holes are 22mm U.N.O Length & Area & Weight per piece

| Mark | Profile | Grade | QTY | Length | Area | Weight |
|---|---|---|---|---|---|---|
| TF18 | FLT25*250 | S355J2N | 4 | 2501.6 | 1.39 | 122.7 |

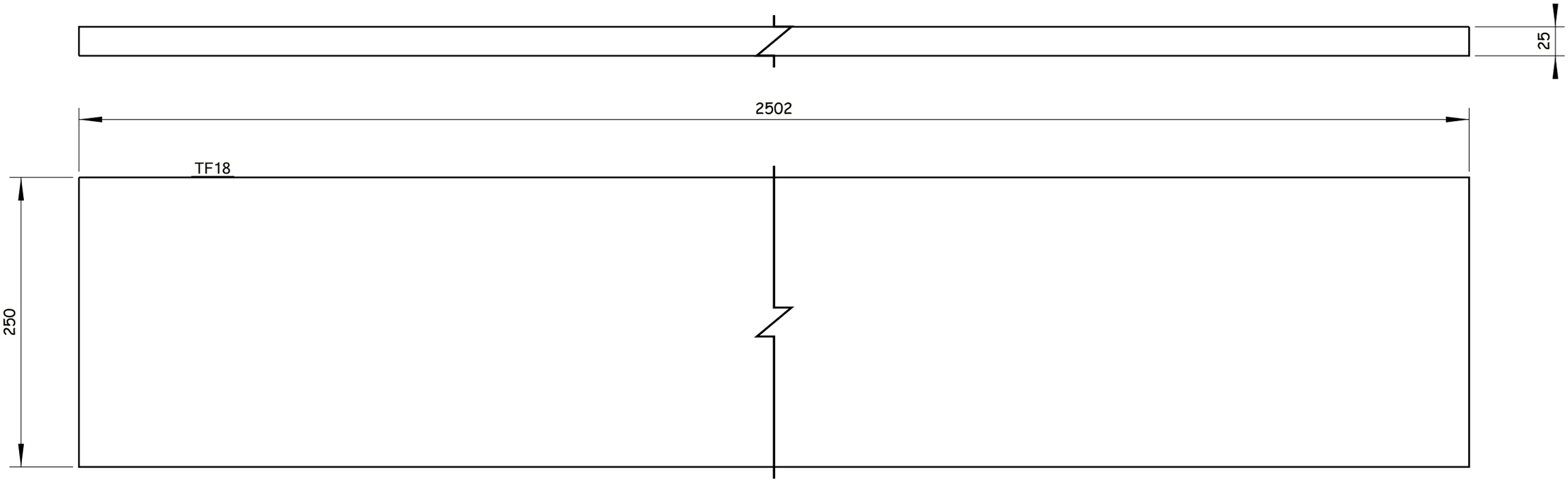


4 Nos. REQUIRED AS DRAWN E.SHTF18

Tekla Structures

GENERAL NOTES:

1. ALL DIMENSIONS ARE IN MILLIMETERS UNLESS OTHERWISE SPECIFIED.
2. LEVELS ARE IN METERS
3. DESIGN SERVICE LIFE OF 100 YEARS.
4. FLANGES OF TOP AND BOTTOM CHORDS TO BE SUPPLIED WITH IMPROVED THROUGH THICKNESS PROPERTIES Z25 ACCORDING TO EN10164.

REFERENCE DRAWINGS

| | |
|---|---|
| 1 | 93M-BOA-NAT-LOT-26612 |
| 2 | |
| 3 | |
| 4 | |
| 5 | |
| 6 | |
| 7 | |
| 8 | |
| 9 | |
| 10 | |
| 11 | |

6TH OF OCTOBER CITY RAIL TRANSIT MONORAIL &
NEW CAPITAL CITY RAIL TRANSIT MONORAIL

The Authority
Hill International
Authority Consultant

ORASCOM CONSTRUCTION
Main Contractor

BOMBARDIER
SENER
SHAKER CONSULTANCY GROUP
Designer

CONTRACTOR / CONSULTANT:
ENGINEERING HOUSE FOR CONSULTANCY

6 October Monorail
Engineering Unit
Valid For Construction

| SCALE | CHD DRAWING | DATE |
|---|---|---|
| AS SHOWN | | 20.11.2024 |

| REV | DATE | BY | DESCRIPTION | CHK | APD |
|---|---|---|---|---|---|
| A | 20-11-24 | E.SH | ISSUE FOR APPROVAL | A.SH | M.M |

DRAWING TITLE:
6TH OF OCTOBER MONORAIL
**SHOP DRAWING FOR STRADDLE BENT 6OL11-22C2**
**STEEL RAFTER.**
TF18

| Project Code | Rubric | Initiator | Lot | Ref | Number | Revision |
|---|---|---|---|---|---|---|
| 93 | M0407 | ACC | 60L11 | DWG | 90548 | A |

REVIEWED WITH COMMENT
MONORAILS PROJECT

-Drawing shall be updated according to the comments on the GA drawing.
-Approval is subject to approval of coordination package between multi-disciplines.

All holes are 22mm U.N.O Length & Area & Weight per piece

| Mark | Profile | Grade | QTY | Length | Area | Weight |
|---|---|---|---|---|---|---|
| TF19 | FLT25*250 | S355J2N | 4 | 2493.5 | 1.38 | 122.3 |

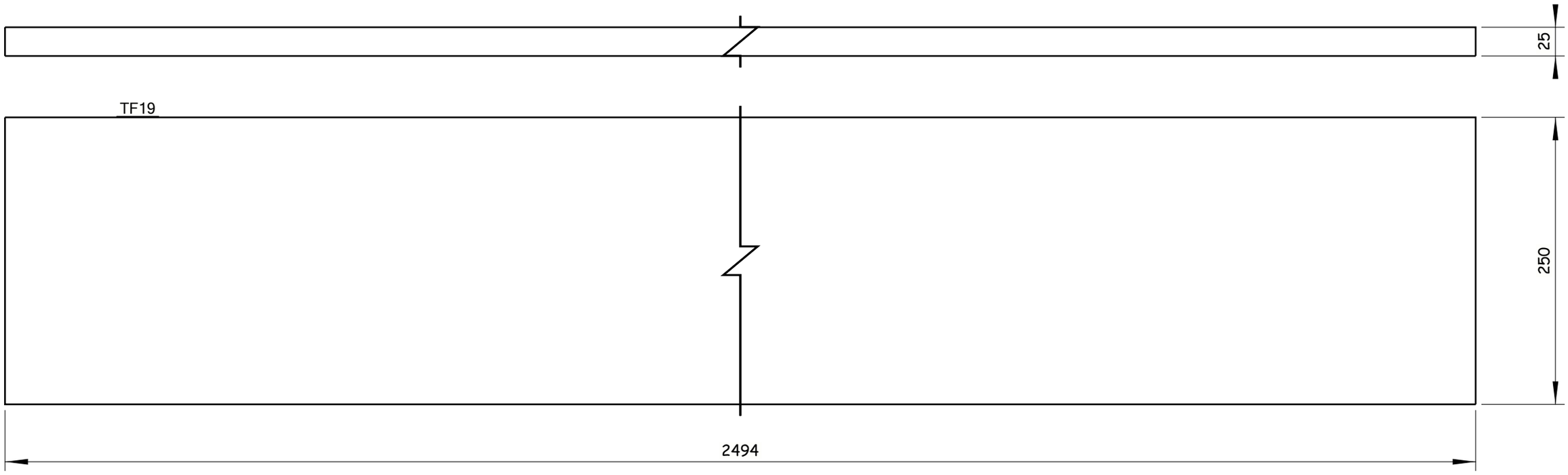


4 Nos. REQUIRED AS DRAWN E.SHTF19

Tekla Structures

GENERAL NOTES:

1. ALL DIMENSIONS ARE IN MILLIMETERS UNLESS OTHERWISE SPECIFIED.
2. LEVELS ARE IN METERS
3. DESIGN SERVICE LIFE OF 100 YEARS.
4. FLANGES OF TOP AND BOTTOM CHORDS TO BE SUPPLIED WITH IMPROVED THROUGH THICKNESS PROPERTIES Z25 ACCORDING TO EN10164.

REFERENCE DRAWINGS

| | |
|---|---|
| 1 | 93M-BOA-NAT-LOT-26612 |
| 2 | |
| 3 | |
| 4 | |
| 5 | |
| 6 | |
| 7 | |
| 8 | |
| 9 | |
| 10 | |
| 11 | |

6TH OF OCTOBER CITY RAIL TRANSIT MONORAIL &
NEW CAPITAL CITY RAIL TRANSIT MONORAIL

The Authority
Hill International
Authority Consultant

ORASCOM CONSTRUCTION
Main Contractor

BOMBARDIER
SENER
SHAKER CONSULTANCY GROUP
Designer

CONTRACTOR & CONSULTANT:
ENGINEERING HOUSE FOR CONSULTANCY

6 October Monorail
Engineering Unit
Valid For Construction

SCALE: AS SHOWN | CHK'D DRAWING | DATE: 20.11.2024

| REV | DATE | BY | DESCRIPTION | CHK | APD |
|---|---|---|---|---|---|
| A | 20-11-24 | E.SH | ISSUE FOR APPROVAL | A.SH | M.M |

DRAWING TITLE:
6TH OF OCTOBER MONORAIL
**SHOP DRAWING FOR STRADDLE BENT 6OL11-22C2**
**STEEL RAFTER.**
TF19

| Project Code | Rubric | Initiator | Lot | Ref | Number | Revision |
|---|---|---|---|---|---|---|
| 93 | M0407 | ACC | 60L11 | DWG | 90549 | A |

REVIEWED WITH COMMENT
MONORAILS PROJECT

-Drawing shall be updated according to the comments on the GA drawing.
-Approval is subject to approval of coordination package between multi-disciplines.

All holes are 22mm U.N.O  Length & Area & Weight per piece

| Mark | Profile | Grade | QTY | Length | Area | Weight |
|---|---|---|---|---|---|---|
| TF20 | FLT20*200 | S355J2N | 4 | 500.9 | 0.20 | 13.8 |

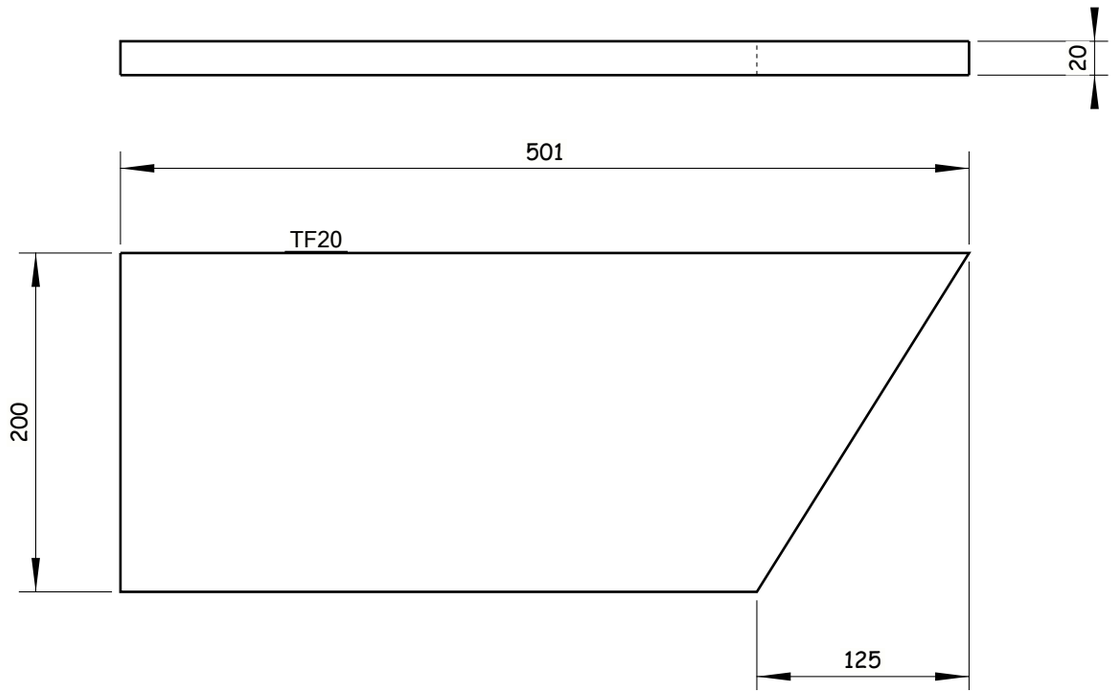


4 Nos. REQUIRED AS DRAWN E.SHTF20

6 October Monorail
Engineering Unit
Valid For Construction

Tekla Structures

GENERAL NOTES:

1. ALL DIMENSIONS ARE IN MILLIMETERS UNLESS OTHERWISE SPECIFIED.
2. LEVELS ARE IN METERS
3. DESIGN SERVICE LIFE OF 100 YEARS.
4. FLANGES OF TOP AND BOTTOM CHORDS TO BE SUPPLIED WITH IMPROVED THROUGH THICKNESS PROPERTIES Z25 ACCORDING TO EN10164.

REFERENCE DRAWINGS

| | |
|---|---|
| 1 | 93M-BOA-NAT-LOT-26612 |
| 2 | |
| 3 | |
| 4 | |
| 5 | |
| 6 | |
| 7 | |
| 8 | |
| 9 | |
| 10 | |
| 11 | |

6TH OF OCTOBER CITY RAIL TRANSIT MONORAIL &
NEW CAPITAL CITY RAIL TRANSIT MONORAIL

The Authority — Hill International Authority Consultant

Main Contractor: ORASCOM CONSTRUCTION / BOMBARDIER

Designer: SENER / SHAKER CONSULTANCY GROUP

CONTRACTOR / CONSULTANT :

ENGINEERING HOUSE FOR CONSULTANCY

SCALE: AS SHOWN | CHD DRAWING | DATE: 20.11.2024

| REV | DATE | BY | DESCRIPTION | CHK | APD |
|---|---|---|---|---|---|
| A | 20-11-24 | E.SH | ISSUE FOR APPROVAL | A.SH | M.M |

DRAWING TITLE:
6TH OF OCTOBER MONORAIL
**SHOP DRAWING FOR STRADDLE BENT 6OL11-22C2**
**STEEL RAFTER.**
TF20

| Project Code | Rubric | Initiator | Lot | Ref | Number | Revision |
|---|---|---|---|---|---|---|
| 93M | 0407 | ACC | 60L11 | DWG | 90550 | A |

REVIEWED WITH COMMENT
MONORAILS PROJECT

-Drawing shall be updated according to the comments on the GA drawing.
-Approval is subject to approval of coordination package between multi-disciplines.

All holes are 22mm U.N.O Length & Area & Weight per piece

| Mark | Profile | Grade | QTY | Length | Area | Weight |
|---|---|---|---|---|---|---|
| TF21 | FLT20*200 | S355J2N | 1 | 11019.0 | 4.86 | 346.0 |

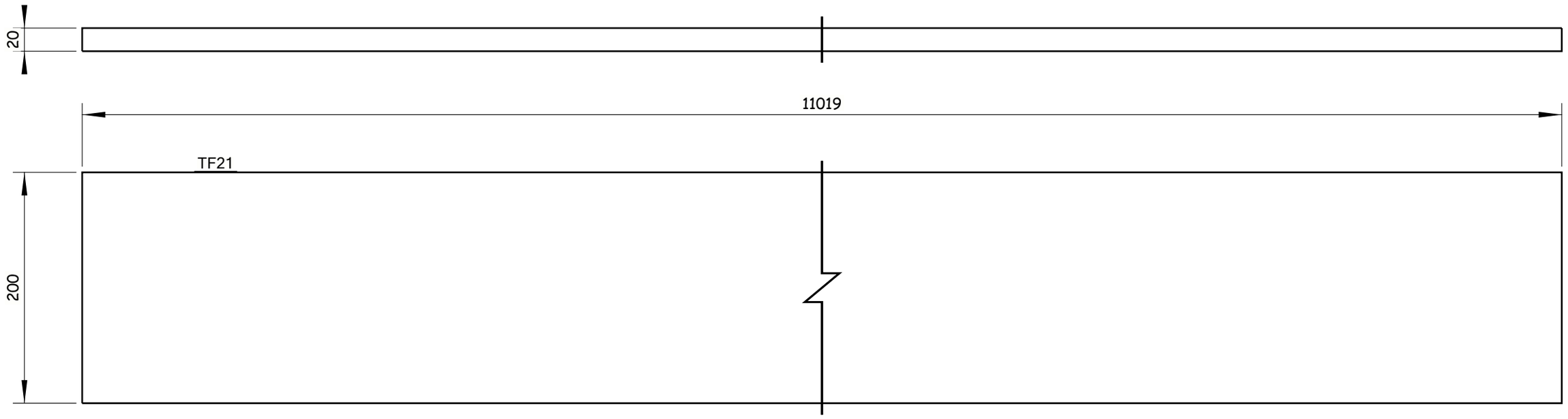


1 Nos. REQUIRED AS DRAWN E.SHTF21

6 October Monorail
Engineering Unit
Valid For Construction

Tekla Structures

GENERAL NOTES:

1. ALL DIMENSIONS ARE IN MILLIMETERS UNLESS OTHERWISE SPECIFIED.
2. LEVELS ARE IN METERS
3. DESIGN SERVICE LIFE OF 100 YEARS.
4. FLANGES OF TOP AND BOTTOM CHORDS TO BE SUPPLIED WITH IMPROVED THROUGH THICKNESS PROPERTIES Z25 ACCORDING TO EN10164.

REFERENCE DRAWINGS

| | |
|---|---|
| 1 | 93M-BOA-NAT-LOT-26612 |
| 2 | |
| 3 | |
| 4 | |
| 5 | |
| 6 | |
| 7 | |
| 8 | |
| 9 | |
| 10 | |
| 11 | |

6TH OF OCTOBER CITY RAIL TRANSIT MONORAIL &
NEW CAPITAL CITY RAIL TRANSIT MONORAIL

The Authority | Hill International Authority Consultant | ORASCOM CONSTRUCTION | BOMBARDIER | Main Contractor | SENER | SHAKER CONSULTANCY GROUP | Designer

CONTRACTOR / CONSULTANT :

ENGINEERING HOUSE FOR CONSULTANCY

| SCALE | CHD DRAWING | DATE |
|---|---|---|
| AS SHOWN | | 20.11.2024 |

| REV | DATE | BY | DESCRIPTION | CHK | APD |
|---|---|---|---|---|---|
| A | 20-11-24 | E.SH | ISSUE FOR APPROVAL | A.SH | M.M |

DRAWING TITLE:
6TH OF OCTOBER MONORAIL
**SHOP DRAWING FOR STRADDLE BENT 6OL11-22C2**
**STEEL RAFTER.**
TF21

| Project Code | Rubric | Initiator | Lot | Ref | Number | Revision |
|---|---|---|---|---|---|---|
| 93M | 04 07 | ACC | 60L11 | DWG | 90551 | A |

REVIEWED WITH COMMENT
MONORAILS PROJECT

-Drawing shall be updated according to the comments on the GA drawing.
-Approval is subject to approval of coordination package between multi-disciplines.

All holes are 22mm U.N.O  Length & Area & Weight per piece

| Mark | Profile | Grade | QTY | Length | Area | Weight |
|---|---|---|---|---|---|---|
| TF22 | FLT20*200 | S355J2N | 2 | 3751.5 | 1.66 | 117.8 |

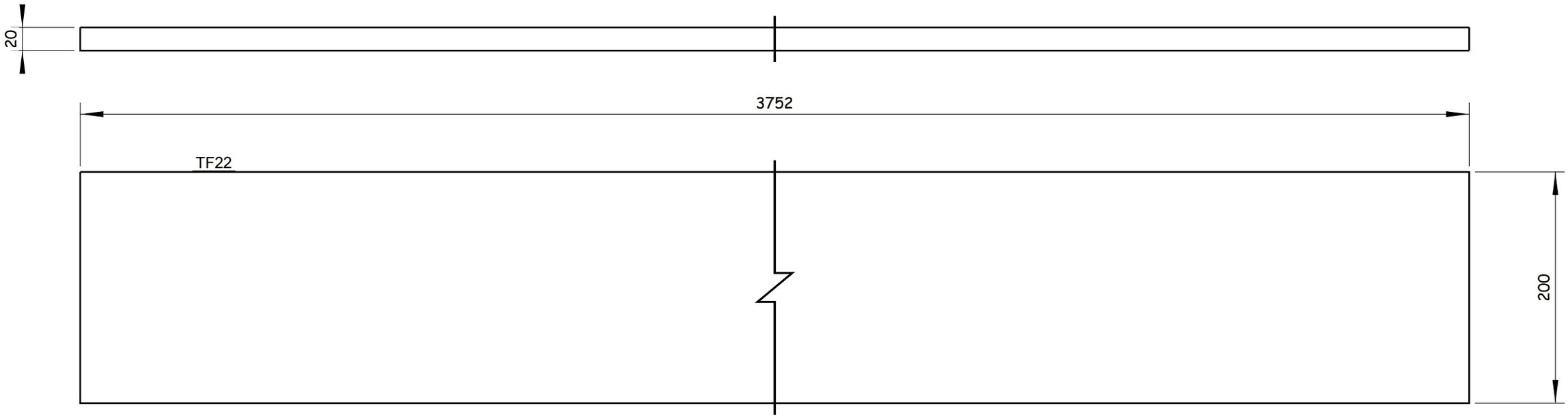


2 Nos. REQUIRED AS DRAWN E.SHTF22

6 October Monorail
Engineering Unit
Valid For Construction

Tekla Structures

GENERAL NOTES:

1. ALL DIMENSIONS ARE IN MILLIMETERS UNLESS OTHERWISE SPECIFIED.
2. LEVELS ARE IN METERS
3. DESIGN SERVICE LIFE OF 100 YEARS.
4. FLANGES OF TOP AND BOTTOM CHORDS TO BE SUPPLIED WITH IMPROVED THROUGH THICKNESS PROPERTIES Z25 ACCORDING TO EN10164.

REFERENCE DRAWINGS

| | |
|---|---|
| 1 | 93M-BOA-NAT-LOT-26612 |
| 2 | |
| 3 | |
| 4 | |
| 5 | |
| 6 | |
| 7 | |
| 8 | |
| 9 | |
| 10 | |
| 11 | |

6TH OF OCTOBER CITY RAIL TRANSIT MONORAIL &
NEW CAPITAL CITY RAIL TRANSIT MONORAIL

The Authority — Hill International Authority Consultant

ORASCOM CONSTRUCTION — BOMBARDIER — Main Contractor

SENER — SHAKER CONSULTANCY GROUP — Designer

CONTRACTOR / CONSULTANT :

ENGINEERING HOUSE FOR CONSULTANCY

| SCALE | CHD DRAWING | DATE |
|---|---|---|
| AS SHOWN | | 20.11.2024 |

| REV | DATE | BY | DESCRIPTION | CHK | APD |
|---|---|---|---|---|---|
| A | 20-11-24 | E.SH | ISSUE FOR APPROVAL | A.SH | M.M |

DRAWING TITLE:
6TH OF OCTOBER MONORAIL
**SHOP DRAWING FOR STRADDLE BENT 6OL11-22C2**
**STEEL RAFTER.**
TF22

| Project Code | Rubric | Initiator | Lot | Ref | Number | Revision |
|---|---|---|---|---|---|---|
| 93M | 0407 | ACC | 60L11 | DWG | 90552 | A |

| All holes are 22mm U.N.O Length & Area & Weight per piece | | | | | | |
|---|---|---|---|---|---|---|
| TW1 | FLT10*200 | S355J2N | 4 | 12000.0 | 5.04 | 188.3 |
| Mark | Profile | Grade | QTY | Length | Area | Weight |

REVIEWED WITH COMMENT MONORAILS PROJECT

-Drawing shall be updated according to the comments on the GA drawing.
-Approval is subject to approval of coordination package between multi-disciplines.

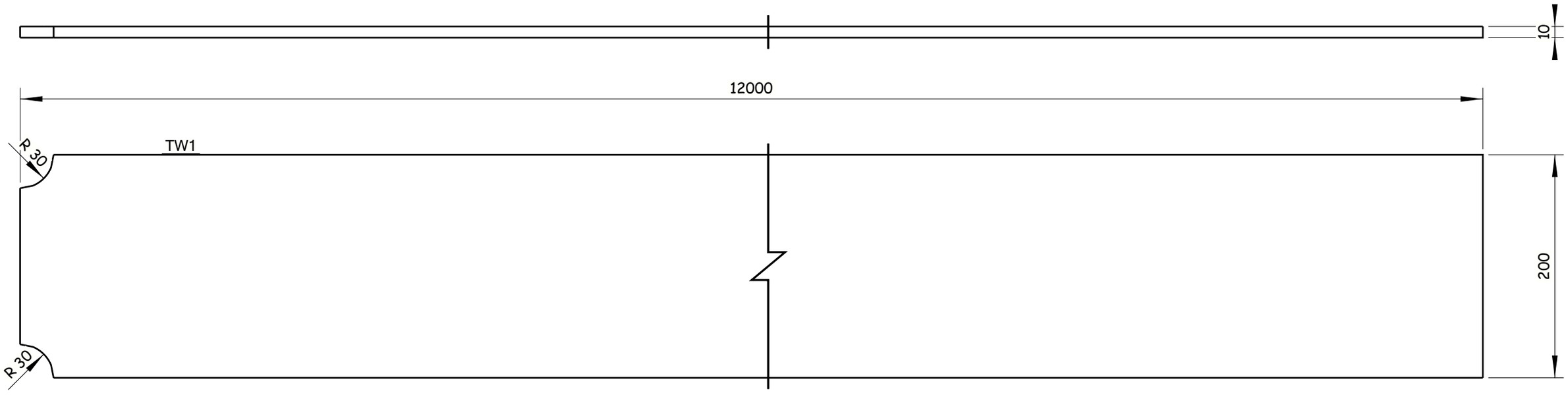


4 Nos. REQUIRED AS DRAWN E.SHTW1

6 October Monorail Engineering Unit
Valid For Construction

GENERAL NOTES:

1. ALL DIMENSIONS ARE IN MILLIMETERS UNLESS OTHERWISE SPECIFIED.
2. LEVELS ARE IN METERS
3. DESIGN SERVICE LIFE OF 100 YEARS.
4. FLANGES OF TOP AND BOTTOM CHORDS TO BE SUPPLIED WITH IMPROVED THROUGH THICKNESS PROPERTIES Z25 ACCORDING TO EN10164.

REFERENCE DRAWINGS

| | |
|---|---|
| 1 | 93M-BOA-NAT-LOT-26612 |
| 2 | |
| 3 | |
| 4 | |
| 5 | |
| 6 | |
| 7 | |
| 8 | |
| 9 | |
| 10 | |
| 11 | |

6TH OF OCTOBER CITY RAIL TRANSIT MONORAIL & NEW CAPITAL CITY RAIL TRANSIT MONORAIL

وزارة النقل
MINISTRY OF TRANSPORT
The Authority
Hill International
Authority Consultant

ORASCOM CONSTRUCTION
BOMBARDIER
Main Contractor

SENER
SHAKER CONSULTANCY GROUP
Designer

CONTRACTOR CONSULTANT:
EHC
ENGINEERING HOUSE FOR CONSULTANCY

| SCALE AS SHOWN | SHOPDRAWING | DATE 20.11.2024 |
|---|---|---|

| REV | DATE | BY | DESCRIPTION | CHK | APD |
|---|---|---|---|---|---|
| A | 20-11-24 | E.SH | ISSUE FOR APPROVAL | A.SH | M.M |

DRAWING TITLE:
6TH OF OCTOBER MONORAIL
**SHOP DRAWING FOR STRADDLE BENT 6OL11-22C2**
**STEEL RAFTER.**
TW1

| Project Code | Rubric | Initiator | Lot | Ref | Number | Revision |
|---|---|---|---|---|---|---|
| 93M | 0407 | ACC | 60L11 | DWG | 90553 | A |

Tekla Structures

REVIEWED WITH COMMENT
MONORAILS PROJECT

-Drawing shall be updated according to the comments on the GA drawing.
-Approval is subject to approval of coordination package between multi-disciplines.

All holes are 22mm U.N.O Length & Area & Weight per piece

| Mark | Profile | Grade | QTY | Length | Area | Weight |
|---|---|---|---|---|---|---|
| TW2 | FLT10*200 | S355J2N | 7 | 5693.0 | 2.40 | 89.4 |

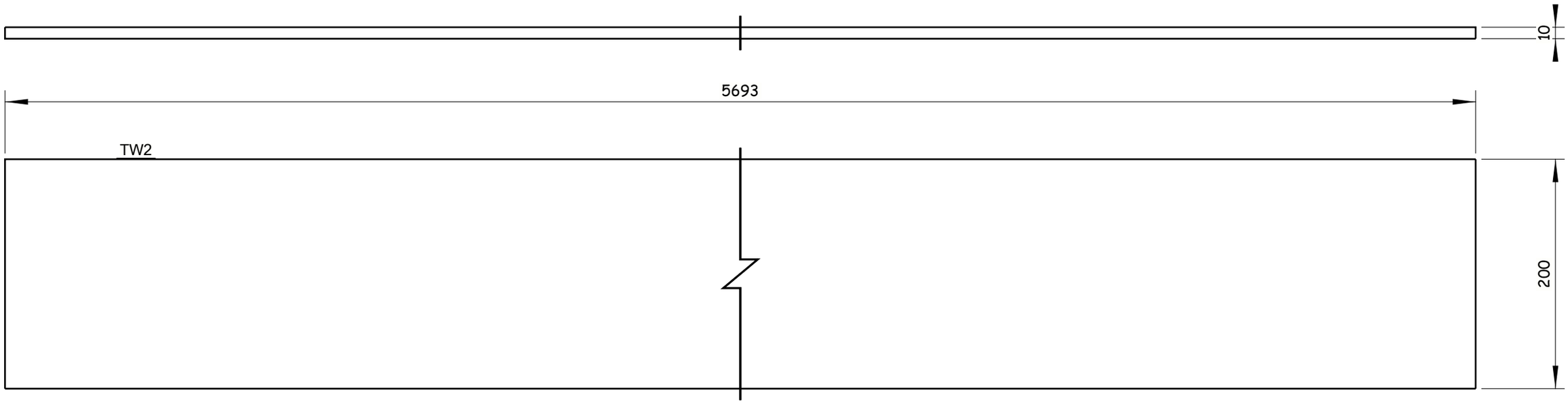


7 Nos. REQUIRED AS DRAWN E.SHTW2

6 October Monorail
Engineering Unit
Valid For Construction

GENERAL NOTES:

1. ALL DIMENSIONS ARE IN MILLIMETERS UNLESS OTHERWISE SPECIFIED.
2. LEVELS ARE IN METERS
3. DESIGN SERVICE LIFE OF 100 YEARS.
4. FLANGES OF TOP AND BOTTOM CHORDS TO BE SUPPLIED WITH IMPROVED THROUGH THICKNESS PROPERTIES Z25 ACCORDING TO EN10164.

REFERENCE DRAWINGS

| | |
|---|---|
| 1 | 93M-BOA-NAT-LOT-26612 |
| 2 | |
| 3 | |
| 4 | |
| 5 | |
| 6 | |
| 7 | |
| 8 | |
| 9 | |
| 10 | |
| 11 | |

6TH OF OCTOBER CITY RAIL TRANSIT MONORAIL &
NEW CAPITAL CITY RAIL TRANSIT MONORAIL

The Authority
Hill International
Authority Consultant

Main Contractor

Designer

CONTRACTOR & CONSULTANT:
ENGINEERING HOUSE FOR CONSULTANCY

SCALE: AS SHOWN
CHK'D DRAWING
DATE: 20.11.2024

| REV | DATE | BY | DESCRIPTION | CHK | APD |
|---|---|---|---|---|---|
| A | 20-11-24 | E.SH | ISSUE FOR APPROVAL | A.SH | M.M |

DRAWING TITLE:
6TH OF OCTOBER MONORAIL
**SHOP DRAWING FOR STRADDLE BENT 6OL11-22C2**
**STEEL RAFTER.**
TW2

| Project Code | Rubric | Initiator | Lot | Ref | Number | Revision |
|---|---|---|---|---|---|---|
| 93 | M0407 | ACC | 60L111 | DWG | 90554 | A |

Tekla Structures

REVIEWED WITH COMMENT
MONORAILS PROJECT

-Drawing shall be updated according to the comments on the GA drawing.
-Approval is subject to approval of coordination package between multi-disciplines.

All holes are 22mm U.N.O Length & Area & Weight per piece

| Mark | Profile | Grade | QTY | Length | Area | Weight |
|---|---|---|---|---|---|---|
| TW3 | FLT10*200 | S355J2N | 2 | 11244.5 | 4.66 | 173.8 |

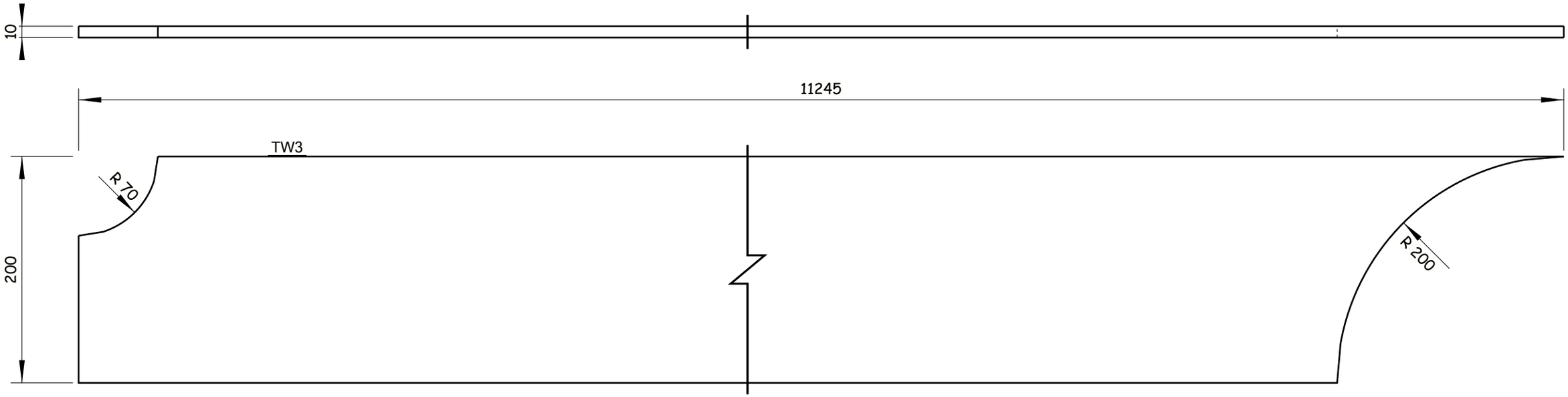


2 Nos. REQUIRED AS DRAWN E.SHTW3

Tekla Structures

GENERAL NOTES:

1. ALL DIMENSIONS ARE IN MILLIMETERS UNLESS OTHERWISE SPECIFIED.
2. LEVELS ARE IN METERS
3. DESIGN SERVICE LIFE OF 100 YEARS.
4. FLANGES OF TOP AND BOTTOM CHORDS TO BE SUPPLIED WITH IMPROVED THROUGH THICKNESS PROPERTIES Z25 ACCORDING TO EN10164.

REFERENCE DRAWINGS

| | |
|---|---|
| 1 | 93M-BOA-NAT-LOT-26612 |
| 2 | |
| 3 | |
| 4 | |
| 5 | |
| 6 | |
| 7 | |
| 8 | |
| 9 | |
| 10 | |
| 11 | |

6TH OF OCTOBER CITY RAIL TRANSIT MONORAIL &
NEW CAPITAL CITY RAIL TRANSIT MONORAIL

The Authority
Hill International
Authority Consultant

ORASCOM CONSTRUCTION
Main Contractor

BOMBARDIER
SENER
SHAKER CONSULTANCY GROUP
Designer

CONTRACTOR:
CONSULTANT:
EHC
ENGINEERING HOUSE FOR CONSULTANCY

6 October Monorail
Engineering Unit
Valid For Construction

| SCALE | CHD DRAWING | DATE |
|---|---|---|
| AS SHOWN | | 20.11.2024 |

| REV | DATE | BY | DESCRIPTION | CHK | APD |
|---|---|---|---|---|---|
| A | 20-11-24 | E.SH | ISSUE FOR APPROVAL | A.SH | M.M |

DRAWING TITLE:
6TH OF OCTOBER MONORAIL
**SHOP DRAWING FOR STRADDLE BENT 6OL11-22C2**
**STEEL RAFTER.**
TW3

| Project Code | Rubric | Initiator | Lot | Ref | Number | Revision |
|---|---|---|---|---|---|---|
| 93 | M0407 | ACC | 60L111 | DWG | 90555 | A |

REVIEWED WITH COMMENT
MONORAILS PROJECT

-Drawing shall be updated according to the comments on the GA drawing.
-Approval is subject to approval of coordination package between multi-disciplines.

All holes are 22mm U.N.O Length & Area & Weight per piece

| Mark | Profile | Grade | QTY | Length | Area | Weight |
|---|---|---|---|---|---|---|
| TW4 | FLT10*200 | S355J2N | 4 | 981.0 | 0.41 | 15.2 |

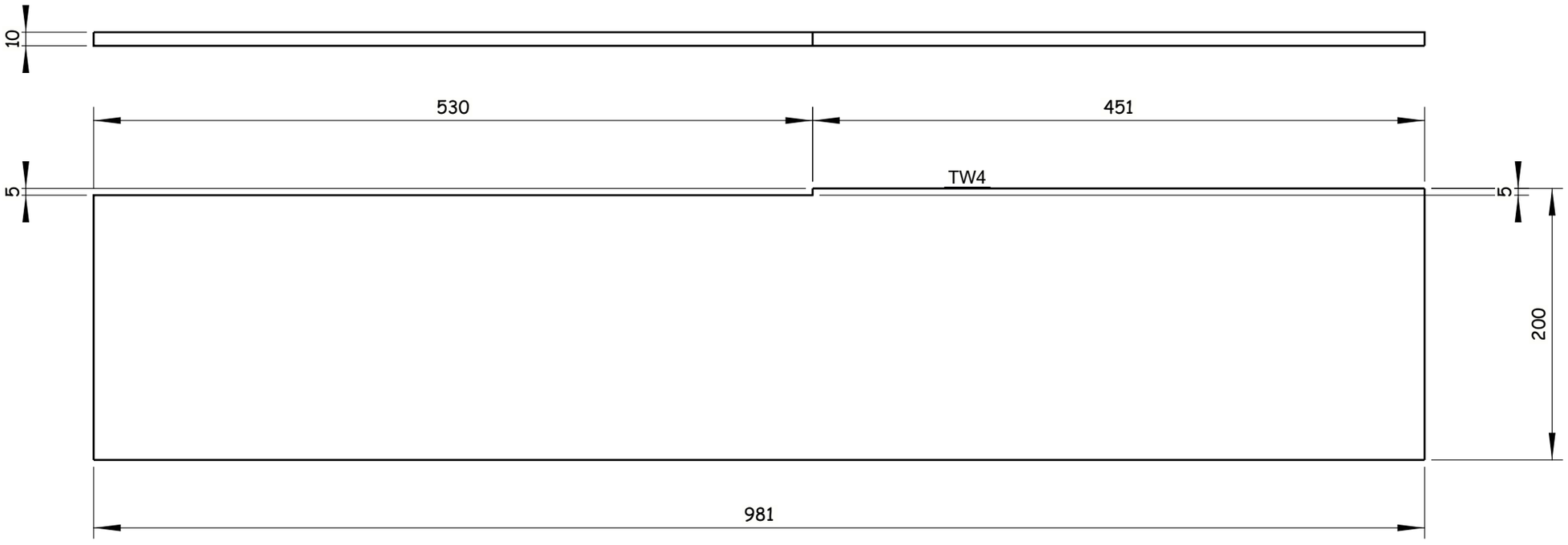


4 Nos. REQUIRED AS DRAWN E.SHTW4

Tekla Structures

GENERAL NOTES:

1. ALL DIMENSIONS ARE IN MILLIMETERS UNLESS OTHERWISE SPECIFIED.
2. LEVELS ARE IN METERS
3. DESIGN SERVICE LIFE OF 100 YEARS.
4. FLANGES OF TOP AND BOTTOM CHORDS TO BE SUPPLIED WITH IMPROVED THROUGH THICKNESS PROPERTIES Z25 ACCORDING TO EN10164.

REFERENCE DRAWINGS

| | |
|---|---|
| 1 | 93M-BOA-NAT-LOT-26612 |
| 2 | |
| 3 | |
| 4 | |
| 5 | |
| 6 | |
| 7 | |
| 8 | |
| 9 | |
| 10 | |
| 11 | |

6TH OF OCTOBER CITY RAIL TRANSIT MONORAIL &
NEW CAPITAL CITY RAIL TRANSIT MONORAIL

The Authority
Hill International
Authority Consultant

Main Contractor

Designer

CONTRACTOR & CONSULTANT:
ENGINEERING HOUSE FOR CONSULTANCY

6 October Monorail
Engineering Unit
Valid For Construction

SCALE: AS SHOWN
CHK'D DRAWING
DATE: 20.11.2024

| REV | DATE | BY | DESCRIPTION | CHK | APD |
|---|---|---|---|---|---|
| A | 20-11-24 | E.SH | ISSUE FOR APPROVAL | A.SH | M.M |

DRAWING TITLE:
6TH OF OCTOBER MONORAIL
**SHOP DRAWING FOR STRADDLE BENT 6OL11-22C2**
**STEEL RAFTER.**
TW4

| Project Code | Rubric | Initiator | Lot | Ref | Number | Revision |
|---|---|---|---|---|---|---|
| 93M | 04 07 | ACC | 60 L11 | DWG | 90556 | A |

REVIEWED WITH COMMENT
MONORAILS PROJECT

-Drawing shall be updated according to the comments on the GA drawing.
-Approval is subject to approval of coordination package between multi-disciplines.

All holes are 22mm U.N.O Length & Area & Weight per piece

| Mark | Profile | Grade | QTY | Length | Area | Weight |
|---|---|---|---|---|---|---|
| TW5 | FLT10*200 | S355J2N | 2 | 3894.0 | 1.64 | 61.1 |

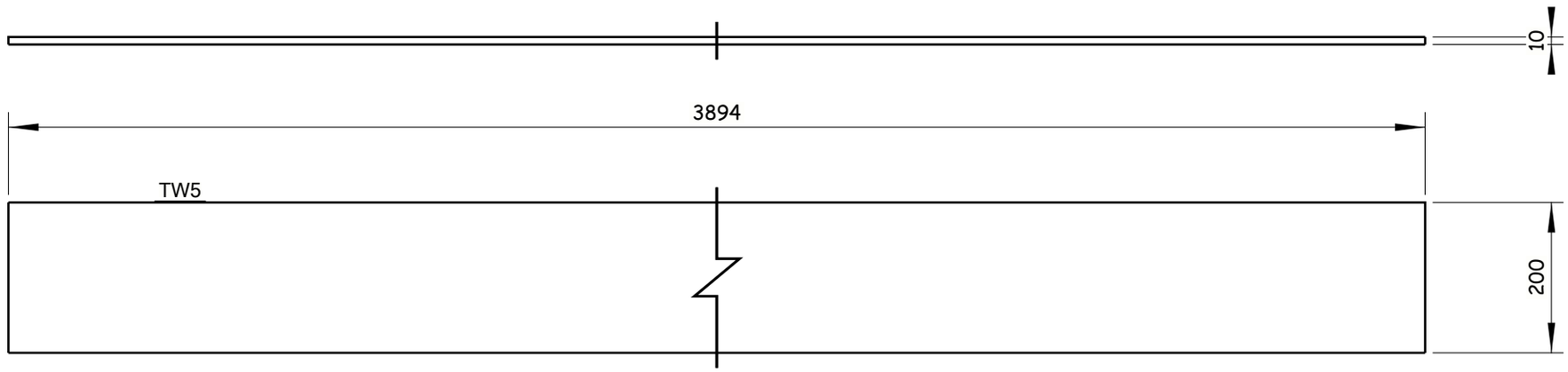


2 Nos. REQUIRED AS DRAWN E.SHTW5

Tekla Structures

GENERAL NOTES:

1. ALL DIMENSIONS ARE IN MILLIMETERS UNLESS OTHERWISE SPECIFIED.
2. LEVELS ARE IN METERS
3. DESIGN SERVICE LIFE OF 100 YEARS.
4. FLANGES OF TOP AND BOTTOM CHORDS TO BE SUPPLIED WITH IMPROVED THROUGH THICKNESS PROPERTIES Z25 ACCORDING TO EN10164.

REFERENCE DRAWINGS

| | |
|---|---|
| 1 | 93M-BOA-NAT-LOT-26612 |
| 2 | |
| 3 | |
| 4 | |
| 5 | |
| 6 | |
| 7 | |
| 8 | |
| 9 | |
| 10 | |
| 11 | |

6TH OF OCTOBER CITY RAIL TRANSIT MONORAIL &
NEW CAPITAL CITY RAIL TRANSIT MONORAIL

The Authority
Hill International
Authority Consultant

ORASCOM CONSTRUCTION
Main Contractor

BOMBARDIER
SENER
SHAKER CONSULTANCY GROUP
Designer

CONTRACTOR / CONSULTANT:
ENGINEERING HOUSE FOR CONSULTANCY

6 October Monorail
Engineering Unit
Valid For Construction

| SCALE | CHD/DRAWING | DATE |
|---|---|---|
| AS SHOWN | | 20.11.2024 |

| REV | DATE | BY | DESCRIPTION | CHK | APD |
|---|---|---|---|---|---|
| A | 20-11-24 | E.SH | ISSUE FOR APPROVAL | A.SH | M.M |

DRAWING TITLE:
6TH OF OCTOBER MONORAIL
**SHOP DRAWING FOR STRADDLE BENT 6OL11-22C2 STEEL RAFTER.**
TW5

| Project Code | Rubric | Initiator | Lot | Ref | Number | Revision |
|---|---|---|---|---|---|---|
| 93M | 0407 | ACC | 60L11 | DWG | 90557 | A |

REVIEWED WITH COMMENT
MONORAILS PROJECT

-Drawing shall be updated according to the comments on the GA drawing.
-Approval is subject to approval of coordination package between multi-disciplines.

All holes are 22mm U.N.O Length & Area & Weight per piece

| Mark | Profile | Grade | QTY | Length | Area | Weight |
|---|---|---|---|---|---|---|
| TW6 | FLT10*200 | S355J2N | 4 | 1680.0 | 0.71 | 26.4 |

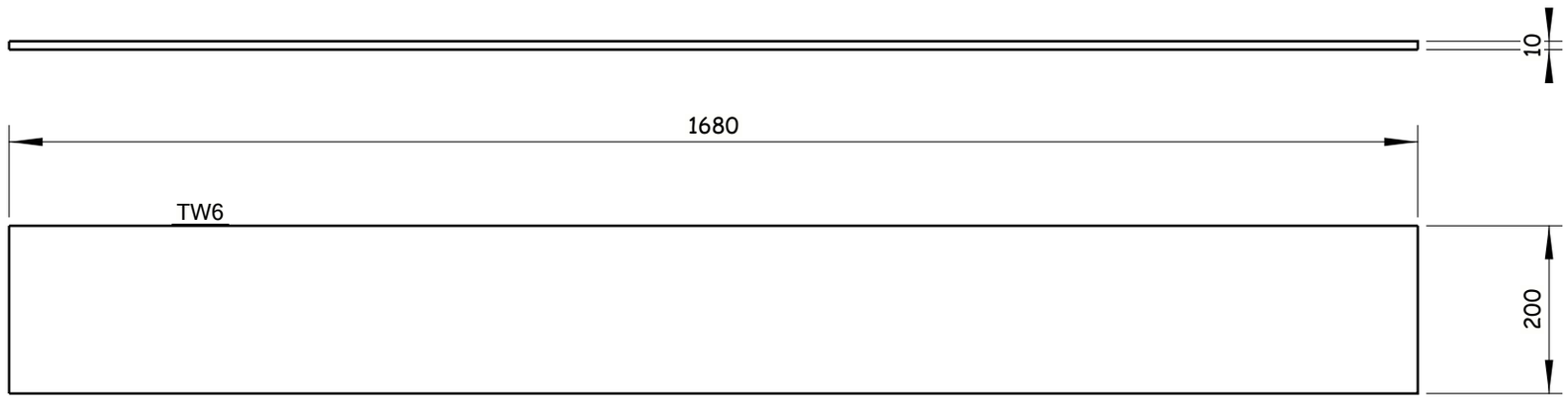


4 Nos. REQUIRED AS DRAWN E.SHTW6

6 October Monorail
Engineering Unit
Valid For Construction

GENERAL NOTES:

1. ALL DIMENSIONS ARE IN MILLIMETERS UNLESS OTHERWISE SPECIFIED.
2. LEVELS ARE IN METERS
3. DESIGN SERVICE LIFE OF 100 YEARS.
4. FLANGES OF TOP AND BOTTOM CHORDS TO BE SUPPLIED WITH IMPROVED THROUGH THICKNESS PROPERTIES Z25 ACCORDING TO EN10164.

REFERENCE DRAWINGS

| | |
|---|---|
| 1 | 93M-BOA-NAT-LOT-26612 |
| 2 | |
| 3 | |
| 4 | |
| 5 | |
| 6 | |
| 7 | |
| 8 | |
| 9 | |
| 10 | |
| 11 | |

6TH OF OCTOBER CITY RAIL TRANSIT MONORAIL &
NEW CAPITAL CITY RAIL TRANSIT MONORAIL

The Authority
Hill International
Authority Consultant

ORASCOM CONSTRUCTION
Main Contractor

BOMBARDIER
SENER
SHAKER CONSULTANCY GROUP
Designer

CONTRACTOR / CONSULTANT:
ENGINEERING HOUSE FOR CONSULTANCY

| SCALE | CHD DRAWING | DATE |
|---|---|---|
| AS SHOWN | | 20.11.2024 |

| REV | DATE | BY | DESCRIPTION | CHK | APD |
|---|---|---|---|---|---|
| A | 20-11-24 | E.SH | ISSUE FOR APPROVAL | A.SH | M.M |

DRAWING TITLE:
6TH OF OCTOBER MONORAIL
**SHOP DRAWING FOR STRADDLE BENT 6OL11-22C2**
**STEEL RAFTER.**
TW6

| Project Code | Rubric | Initiator | Lot | Ref | Number | Revision |
|---|---|---|---|---|---|---|
| 93M | 0407 | ACC | 60L11 | DWG | 90558 | A |

Tekla Structures

REVIEWED WITH COMMENT
MONORAILS PROJECT

-Drawing shall be updated according to the comments on the GA drawing.
-Approval is subject to approval of coordination package between multi-disciplines.

All holes are 22mm U.N.O Length & Area & Weight per piece

| Mark | Profile | Grade | QTY | Length | Area | Weight |
|---|---|---|---|---|---|---|
| TW7 | FLT10*200 | S355J2N | 7 | 12000.0 | 5.04 | 188.2 |

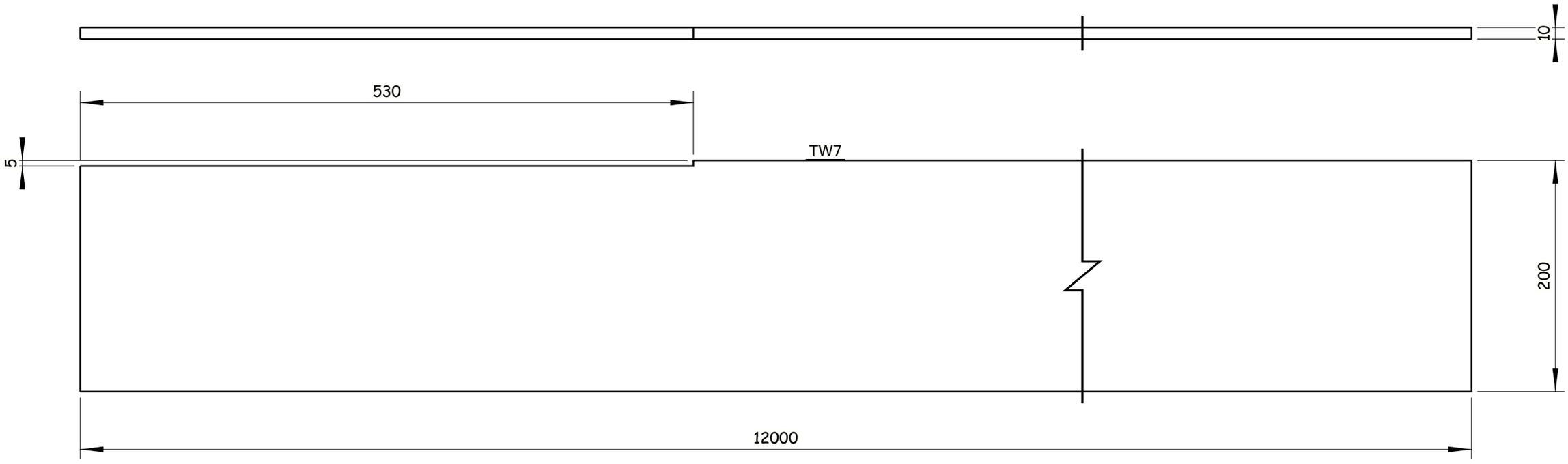


7 Nos. REQUIRED AS DRAWN E.SHTW7

Tekla Structures

GENERAL NOTES:

1. ALL DIMENSIONS ARE IN MILLIMETERS UNLESS OTHERWISE SPECIFIED.
2. LEVELS ARE IN METERS
3. DESIGN SERVICE LIFE OF 100 YEARS.
4. FLANGES OF TOP AND BOTTOM CHORDS TO BE SUPPLIED WITH IMPROVED THROUGH THICKNESS PROPERTIES Z25 ACCORDING TO EN10164.

REFERENCE DRAWINGS

| | |
|---|---|
| 1 | 93M-BOA-NAT-LOT-26612 |
| 2 | |
| 3 | |
| 4 | |
| 5 | |
| 6 | |
| 7 | |
| 8 | |
| 9 | |
| 10 | |
| 11 | |

6TH OF OCTOBER CITY RAIL TRANSIT MONORAIL &
NEW CAPITAL CITY RAIL TRANSIT MONORAIL

The Authority
Hill International
Authority Consultant

Main Contractor

Designer

CONTRACTOR & CONSULTANT:
ENGINEERING HOUSE FOR CONSULTANCY

SCALE: AS SHOWN | CHK'D DRAWING | DATE: 20.11.2024

| REV | DATE | BY | DESCRIPTION | CHK | APD |
|---|---|---|---|---|---|
| A | 20-11-24 | E.SH | ISSUE FOR APPROVAL | A.SH | M.M |

6 October Monorail
Engineering Unit
Valid For Construction

DRAWING TITLE:
6TH OF OCTOBER MONORAIL
SHOP DRAWING FOR STRADDLE BENT 6OL11-22C2
STEEL RAFTER.
TW7

| Project Code | Rubric | Initiator | Lot | Ref | Number | Revision |
|---|---|---|---|---|---|---|
| 93 | M0407 | ACC | 60L111 | DWG | 90559 | A |

| All holes are 22mm U.N.O Length & Area & Weight per piece | | | | | | |
|---|---|---|---|---|---|---|
| TW8 | FLT10*200 | S355J2N | 2 | 1680.0 | 0.68 | 24.2 |
| Mark | Profile | Grade | QTY | Length | Area | Weight |

REVIEWED WITH COMMENT MONORAILS PROJECT

-Drawing shall be updated according to the comments on the GA drawing.
-Approval is subject to approval of coordination package between multi-disciplines.

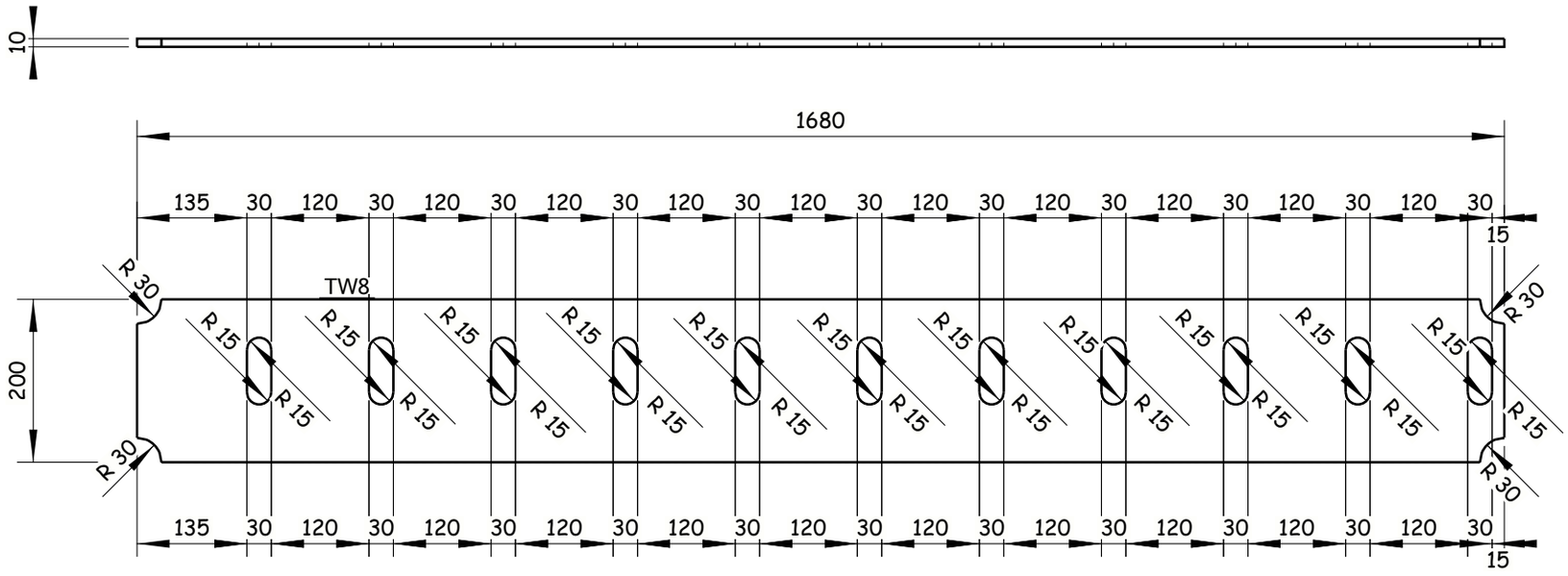


2 Nos. REQUIRED AS DRAWN E.SHTW8

GENERAL NOTES:

1. ALL DIMENSIONS ARE IN MILLIMETERS UNLESS OTHERWISE SPECIFIED.
2. LEVELS ARE IN METERS
3. DESIGN SERVICE LIFE OF 100 YEARS.
4. FLANGES OF TOP AND BOTTOM CHORDS TO BE SUPPLIED WITH IMPROVED THROUGH THICKNESS PROPERTIES Z25 ACCORDING TO EN10164.

REFERENCE DRAWINGS

| | |
|---|---|
| 1 | 93M-BOA-NAT-LOT-26612 |
| 2 | |
| 3 | |
| 4 | |
| 5 | |
| 6 | |
| 7 | |
| 8 | |
| 9 | |
| 10 | |
| 11 | |

6TH OF OCTOBER CITY RAIL TRANSIT MONORAIL & NEW CAPITAL CITY RAIL TRANSIT MONORAIL

وزارة النقل
MINISTRY OF TRANSPORT
The Authority
Hill International
Authority Consultant

ORASCOM CONSTRUCTION
BOMBARDIER
Main Contractor

SENER
SHAKER CONSULTANCY GROUP
Designer

CONTRACTOR CONSULTANT:
EHC
ENGINEERING HOUSE FOR CONSULTANCY

| SCALE | SHOP DRAWING | DATE |
|---|---|---|
| AS SHOWN | | 20.11.2024 |

| REV | DATE | BY | DESCRIPTION | CHK | APD |
|---|---|---|---|---|---|
| A | 20-11-24 | E.SH | ISSUE FOR APPROVAL | A.SH | M.M |

6 October Monorail Engineering Unit
Valid For Construction

DRAWING TITLE:
6TH OF OCTOBER MONORAIL
**SHOP DRAWING FOR STRADDLE BENT 6OL11-22C2**
**STEEL RAFTER.**
TW8

| Project Code | Rubric | Initiator | Lot | Ref | Number | Revision |
|---|---|---|---|---|---|---|
| 93M | 0407 | ACC | 60L11 | DWG | 90560 | A |

Tekla Structures

| All holes are 22mm U.N.O | Length & Area & Weight per piece | | | | | |
|---|---|---|---|---|---|---|
| TW9 | FLT10*200 | S355J2N | 2 | 3894.0 | 1.57 | 56.3 |
| Mark | Profile | Grade | QTY | Length | Area | Weight |

REVIEWED WITH COMMENT MONORAILS PROJECT

-Drawing shall be updated according to the comments on the GA drawing.
-Approval is subject to approval of coordination package between multi-disciplines.

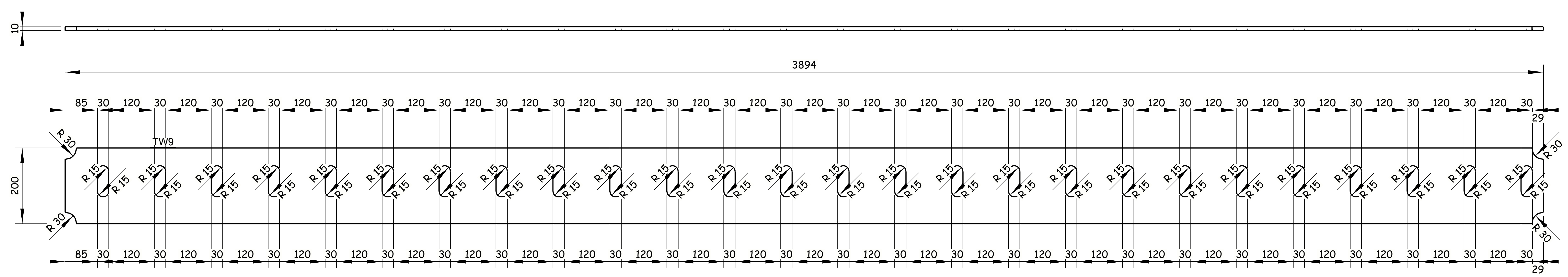


2 Nos. REQUIRED AS DRAWN E.SHTW9

## GENERAL NOTES:

1. ALL DIMENSIONS ARE IN MILLIMETERS UNLESS OTHERWISE SPECIFIED.
2. LEVELS ARE IN METERS
3. DESIGN SERVICE LIFE OF 100 YEARS.
4. FLANGES OF TOP AND BOTTOM CHORDS TO BE SUPPLIED WITH IMPROVED THROUGH THICKNESS PROPERTIES Z25 ACCORDING TO EN10164.

REFERENCE DRAWINGS

| | |
|---|---|
| 1 | 93M-BOA-NAT-LOT-26612 |
| 2 | |
| 3 | |
| 4 | |
| 5 | |
| 6 | |
| 7 | |
| 8 | |
| 9 | |
| 10 | |
| 11 | |

6TH OF OCTOBER CITY RAIL TRANSIT MONORAIL & NEW CAPITAL CITY RAIL TRANSIT MONORAIL

وزارة النقل
MINISTRY OF TRANSPORT
The Authority
Hill International
Authority Consultant

ORASCOM CONSTRUCTION
BOMBARDIER
Main Contractor

SENER
SHAKER CONSULTANCY GROUP
Designer

CONTRACTOR CONSULTANT:
ENGINEERING HOUSE FOR CONSULTANCY

6 October Monorail Engineering Unit Valid For Construction

| SCALE | SHOPDRAWING | DATE |
|---|---|---|
| AS SHOWN | | 20.11.2024 |

| REV | DATE | BY | DESCRIPTION | CHK | APD |
|---|---|---|---|---|---|
| A | 20-11-24 | E.SH | ISSUE FOR APPROVAL | A.SH | M.M |

DRAWING TITLE:
6TH OF OCTOBER MONORAIL
**SHOP DRAWING FOR STRADDLE BENT 6OL11-22C2**
**STEEL RAFTER.**
TW9

| Project Code | Rubric | Initiator | Lot | Ref | Number | Revision |
|---|---|---|---|---|---|---|
| 9 3 M | 0 4 0 7 | A C C | 6 0 L 1 1 | D W G | 90561 | A |

Tekla Structures

REVIEWED WITH COMMENT
MONORAILS PROJECT

-Drawing shall be updated according to the comments on the GA drawing.
-Approval is subject to approval of coordination package between multi-disciplines.

All holes are 22mm U.N.O Length & Area & Weight per piece

| Mark | Profile | Grade | QTY | Length | Area | Weight |
|---|---|---|---|---|---|---|
| TW10 | FLT10*200 | S355J2N | 2 | 1680.0 | 0.68 | 24.2 |

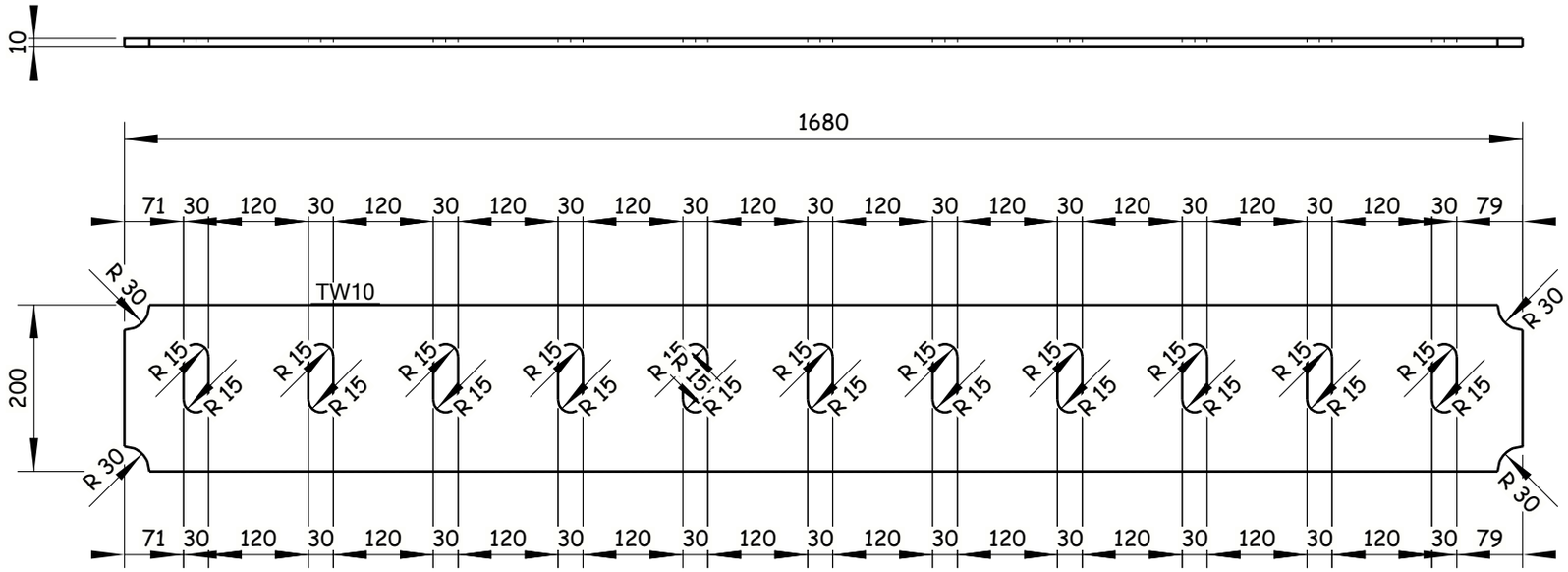


2 Nos. REQUIRED AS DRAWN E.SHTW10

Tekla Structures

GENERAL NOTES:

1. ALL DIMENSIONS ARE IN MILLIMETERS UNLESS OTHERWISE SPECIFIED.
2. LEVELS ARE IN METERS
3. DESIGN SERVICE LIFE OF 100 YEARS.
4. FLANGES OF TOP AND BOTTOM CHORDS TO BE SUPPLIED WITH IMPROVED THROUGH THICKNESS PROPERTIES Z25 ACCORDING TO EN10164.

REFERENCE DRAWINGS

| | |
|---|---|
| 1 | 93M-BOA-NAT-LOT-26612 |
| 2 | |
| 3 | |
| 4 | |
| 5 | |
| 6 | |
| 7 | |
| 8 | |
| 9 | |
| 10 | |
| 11 | |

6TH OF OCTOBER CITY RAIL TRANSIT MONORAIL &
NEW CAPITAL CITY RAIL TRANSIT MONORAIL

The Authority — Hill International Authority Consultant

Main Contractor: ORASCOM CONSTRUCTION — BOMBARDIER

Designer: SENER — SHAKER CONSULTANCY GROUP

CONTRACTOR / CONSULTANT: EHC ENGINEERING HOUSE FOR CONSULTANCY

6 October Monorail
Engineering Unit
Valid For Construction

| REV | DATE | BY | DESCRIPTION | CHK | APD |
|---|---|---|---|---|---|
| A | 20-11-24 | E.SH | ISSUE FOR APPROVAL | A.SH | M.M |

SCALE: AS SHOWN | SHD DRAWING | DATE: 20.11.2024

DRAWING TITLE:
6TH OF OCTOBER MONORAIL
**SHOP DRAWING FOR STRADDLE BENT 6OL11-22C2**
**STEEL RAFTER.**
TW10

| Project Code | Rubric | Initiator | Lot | Ref | Number | Revision |
|---|---|---|---|---|---|---|
| 93MO407 | ACC | 60L11 | DWG | | 90562 | A |

REVIEWED WITH COMMENT
MONORAILS PROJECT

-Drawing shall be updated according to the comments on the GA drawing.
-Approval is subject to approval of coordination package between multi-disciplines.

All holes are 22mm U.N.O  Length & Area & Weight per piece

| Mark | Profile | Grade | QTY | Length | Area | Weight |
|---|---|---|---|---|---|---|
| TW12 | FLT10*275 | S355J2N | 16 | 1919.9 | 1.10 | 41.3 |

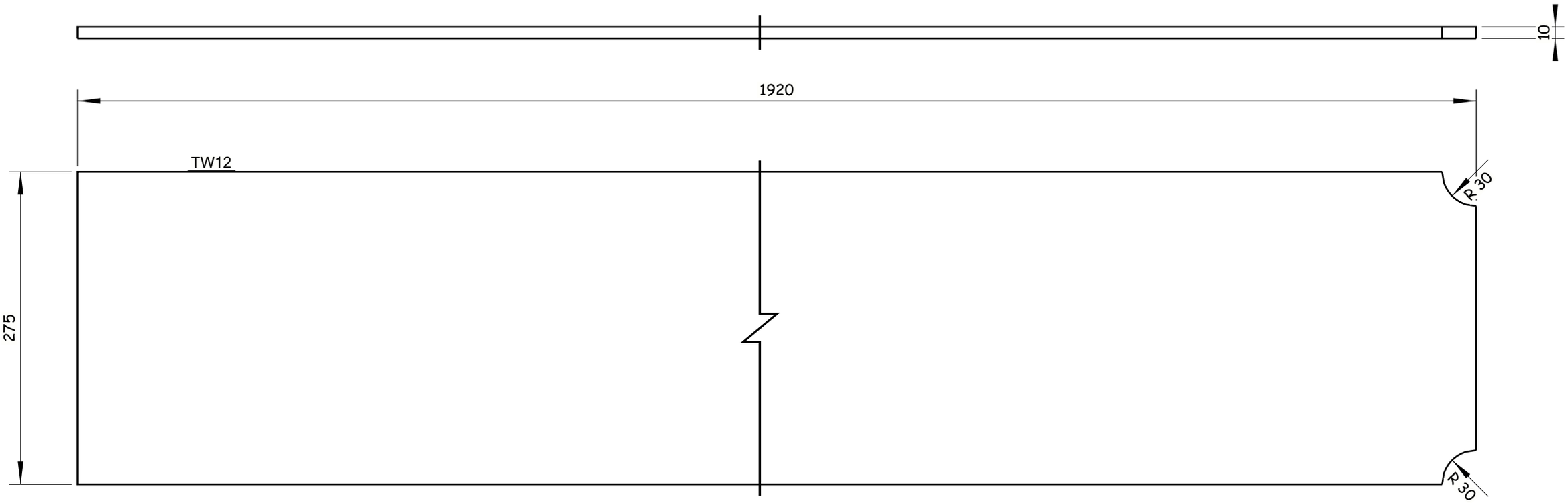


16 Nos. REQUIRED AS DRAWN E.SHTW12

Tekla Structures

GENERAL NOTES:

1. ALL DIMENSIONS ARE IN MILLIMETERS UNLESS OTHERWISE SPECIFIED.
2. LEVELS ARE IN METERS
3. DESIGN SERVICE LIFE OF 100 YEARS.
4. FLANGES OF TOP AND BOTTOM CHORDS TO BE SUPPLIED WITH IMPROVED THROUGH THICKNESS PROPERTIES Z25 ACCORDING TO EN10164.

REFERENCE DRAWINGS

| | |
|---|---|
| 1 | 93M-BOA-NAT-LOT-26612 |
| 2 | |
| 3 | |
| 4 | |
| 5 | |
| 6 | |
| 7 | |
| 8 | |
| 9 | |
| 10 | |
| 11 | |

6TH OF OCTOBER CITY RAIL TRANSIT MONORAIL &
NEW CAPITAL CITY RAIL TRANSIT MONORAIL

The Authority
Hill International
Authority Consultant

ORASCOM CONSTRUCTION
Main Contractor

BOMBARDIER
SENER
SHAKER CONSULTANCY GROUP
Designer

CONTRACTOR / CONSULTANT:
ENGINEERING HOUSE FOR CONSULTANCY

SCALE: AS SHOWN | SHD/DRAWING | DATE: 20.11.2024

| REV | DATE | BY | DESCRIPTION | CHK | APD |
|---|---|---|---|---|---|
| A | 20-11-24 | E.SH | ISSUE FOR APPROVAL | A.SH | M.M |

6 October Monorail
Engineering Unit
Valid For Construction

DRAWING TITLE:
6TH OF OCTOBER MONORAIL
SHOP DRAWING FOR STRADDLE BENT 6OL11-22C2
STEEL RAFTER.
TW12

| Project Code | Rubric | Initiator | Lot | Ref | Number | Revision |
|---|---|---|---|---|---|---|
| 93 | M0407 | ACC | 60L11 | DWG | 90563 | A |

REVIEWED WITH COMMENT
MONORAILS PROJECT

-Drawing shall be updated according to the comments on the GA drawing.
-Approval is subject to approval of coordination package between multi-disciplines.

All holes are 22mm U.N.O Length & Area & Weight per piece

| Mark | Profile | Grade | QTY | Length | Area | Weight |
|---|---|---|---|---|---|---|
| TW13 | FLT10*275 | S355J2N | 4 | 2996.6 | 1.63 | 61.3 |

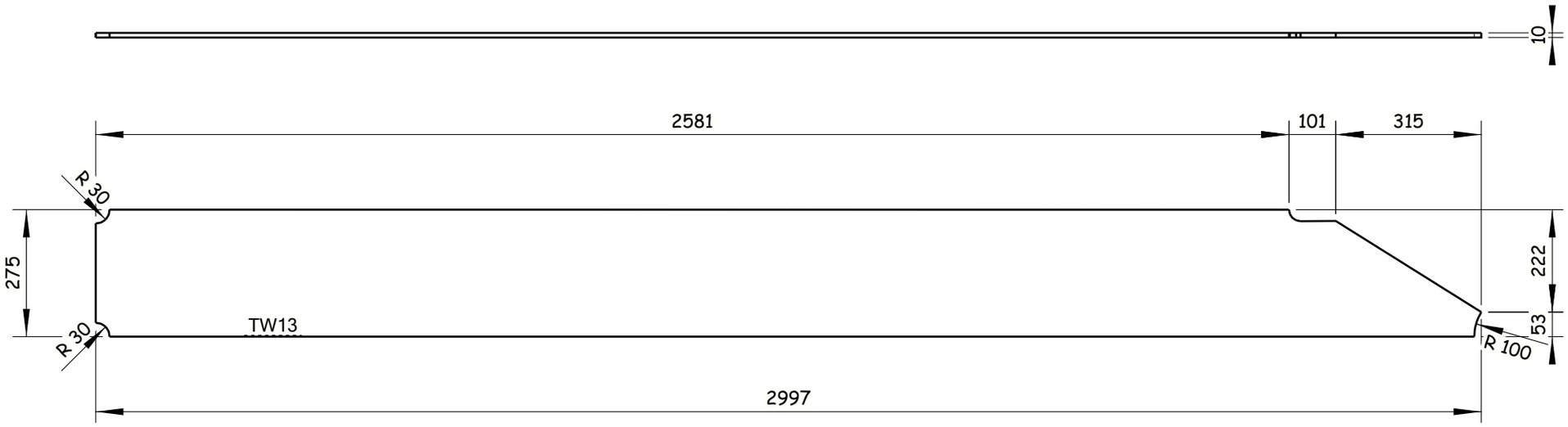


4 Nos. REQUIRED AS DRAWN E.SHTW13

GENERAL NOTES:

1. ALL DIMENSIONS ARE IN MILLIMETERS UNLESS OTHERWISE SPECIFIED.
2. LEVELS ARE IN METERS
3. DESIGN SERVICE LIFE OF 100 YEARS.
4. FLANGES OF TOP AND BOTTOM CHORDS TO BE SUPPLIED WITH IMPROVED THROUGH THICKNESS PROPERTIES Z25 ACCORDING TO EN10164.

REFERENCE DRAWINGS

| | |
|---|---|
| 1 | 93M-BOA-NAT-LOT-26612 |
| 2 | |
| 3 | |
| 4 | |
| 5 | |
| 6 | |
| 7 | |
| 8 | |
| 9 | |
| 10 | |
| 11 | |

6TH OF OCTOBER CITY RAIL TRANSIT MONORAIL &
NEW CAPITAL CITY RAIL TRANSIT MONORAIL

The Authority
Hill International
Authority Consultant

Main Contractor

Designer

CONTRACTOR CONSULTANT :
ENGINEERING HOUSE FOR CONSULTANCY

SCALE: AS SHOWN | CHD'DRWING | DATE: 20.11.2024

| REV | DATE | BY | DESCRIPTION | CHK | APD |
|---|---|---|---|---|---|
| A | 20-11-24 | E.SH | ISSUE FOR APPROVAL | A.SH | M.M |

6 October Monorail
Engineering Unit
Valid For Construction

DRAWING TITLE:
6TH OF OCTOBER MONORAIL
SHOP DRAWING FOR STRADDLE BENT 6OL11-22C2
STEEL RAFTER.
TW13

| Project Code | Rubric | Initiator | Lot | Ref | Number | Revision |
|---|---|---|---|---|---|---|
| 93 | M0407 | ACC | 60L11 | DWG | 90564 | A |

Tekla Structures

REVIEWED WITH COMMENT
MONORAILS PROJECT

-Drawing shall be updated according to the comments on the GA drawing.
-Approval is subject to approval of coordination package between multi-disciplines.

All holes are 22mm U.N.O Length & Area & Weight per piece

| Mark | Profile | Grade | QTY | Length | Area | Weight |
|---|---|---|---|---|---|---|
| TW14 | FLT10*200 | S355J2N | 4 | 1301.3 | 0.53 | 19.6 |

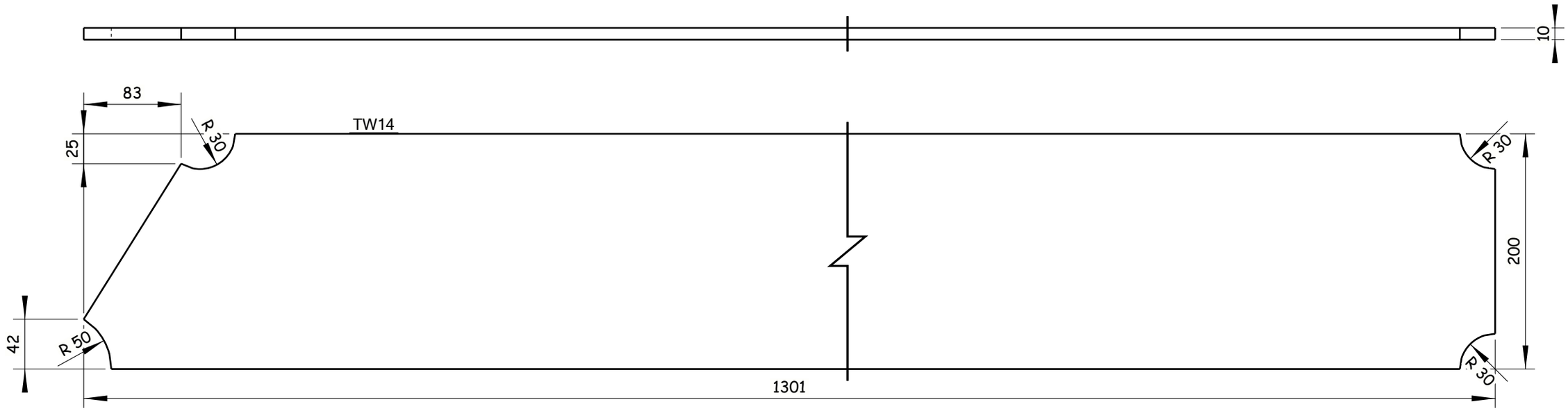


4 Nos. REQUIRED AS DRAWN E.SHTW14

6 October Monorail
Engineering Unit
Valid For Construction

GENERAL NOTES:

1. ALL DIMENSIONS ARE IN MILLIMETERS UNLESS OTHERWISE SPECIFIED.
2. LEVELS ARE IN METERS
3. DESIGN SERVICE LIFE OF 100 YEARS.
4. FLANGES OF TOP AND BOTTOM CHORDS TO BE SUPPLIED WITH IMPROVED THROUGH THICKNESS PROPERTIES Z25 ACCORDING TO EN10164.

REFERENCE DRAWINGS

| | |
|---|---|
| 1 | 93M-BOA-NAT-LOT-26612 |
| 2 | |
| 3 | |
| 4 | |
| 5 | |
| 6 | |
| 7 | |
| 8 | |
| 9 | |
| 10 | |
| 11 | |

6TH OF OCTOBER CITY RAIL TRANSIT MONORAIL &
NEW CAPITAL CITY RAIL TRANSIT MONORAIL

The Authority
Hill International
Authority Consultant

ORASCOM CONSTRUCTION
Main Contractor

BOMBARDIER
SENER
SHAKER CONSULTANCY GROUP
Designer

CONTRACTOR & CONSULTANT:
ENGINEERING HOUSE FOR CONSULTANCY

SCALE: AS SHOWN | CHK'D DRAWING | DATE: 20.11.2024

| REV | DATE | BY | DESCRIPTION | CHK | APD |
|---|---|---|---|---|---|
| A | 20-11-24 | E.SH | ISSUE FOR APPROVAL | A.SH | M.M |

DRAWING TITLE:
6TH OF OCTOBER MONORAIL
**SHOP DRAWING FOR STRADDLE BENT 6OL11-22C2**
**STEEL RAFTER.**
TW14

| Project Code | Rubric | Initiator | Lot | Ref | Number | Revision |
|---|---|---|---|---|---|---|
| 93M | 04 07 | ACC | 60L11 | DWG | 90565 | A |

Tekla Structures

REVIEWED WITH COMMENT
MONORAILS PROJECT

-Drawing shall be updated according to the comments on the GA drawing.
-Approval is subject to approval of coordination package between multi-disciplines.

All holes are 22mm U.N.O Length & Area & Weight per piece

| Mark | Profile | Grade | QTY | Length | Area | Weight |
|---|---|---|---|---|---|---|
| TW15 | PL10*231.1 | S355J2N | 4 | 3001.6 | 1.35 | 50.7 |

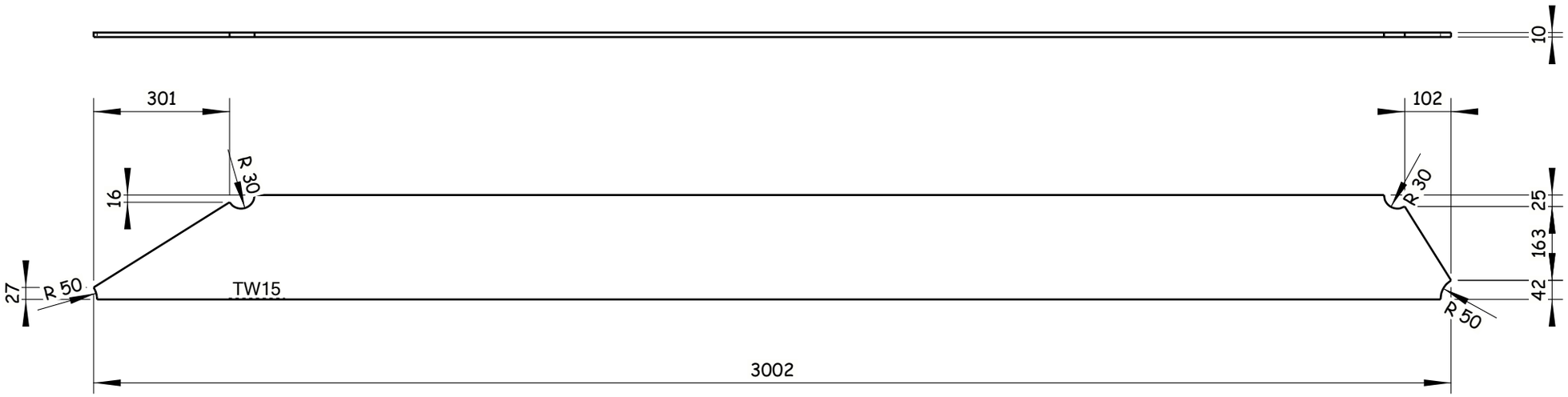


4 Nos. REQUIRED AS DRAWN E.SHTW15

6 October Monorail
Engineering Unit
Valid For Construction

GENERAL NOTES:

1. ALL DIMENSIONS ARE IN MILLIMETERS UNLESS OTHERWISE SPECIFIED.
2. LEVELS ARE IN METERS
3. DESIGN SERVICE LIFE OF 100 YEARS.
4. FLANGES OF TOP AND BOTTOM CHORDS TO BE SUPPLIED WITH IMPROVED THROUGH THICKNESS PROPERTIES Z25 ACCORDING TO EN10164.

REFERENCE DRAWINGS

| | |
|---|---|
| 1 | 93M-BOA-NAT-LOT-26612 |
| 2 | |
| 3 | |
| 4 | |
| 5 | |
| 6 | |
| 7 | |
| 8 | |
| 9 | |
| 10 | |
| 11 | |

6TH OF OCTOBER CITY RAIL TRANSIT MONORAIL &
NEW CAPITAL CITY RAIL TRANSIT MONORAIL

The Authority
Hill International
Authority Consultant

Main Contractor

Designer

CONTRACTOR / CONSULTANT :

ENGINEERING HOUSE FOR CONSULTANCY

SCALE: AS SHOWN | CHD'DRW'ING | DATE: 20.11.2024

| REV | DATE | BY | DESCRIPTION | CHK | APD |
|---|---|---|---|---|---|
| A | 20-11-24 | E.SH | ISSUE FOR APPROVAL | A.SH | M.M |

DRAWING TITLE:
6TH OF OCTOBER MONORAIL
**SHOP DRAWING FOR STRADDLE BENT 6OL11-22C2**
**STEEL RAFTER.**
TW15

| Project Code | Rubric | Initiator | Lot | Ref | Number | Revision |
|---|---|---|---|---|---|---|
| 93 | M0407 | ACC | 60L11 | DWG | 90566 | A |

Tekla Structures

REVIEWED WITH COMMENT
MONORAILS PROJECT

-Drawing shall be updated according to the comments on the GA drawing.
-Approval is subject to approval of coordination package between multi-disciplines.

All holes are 22mm U.N.O Length & Area & Weight per piece

| Mark | Profile | Grade | QTY | Length | Area | Weight |
|---|---|---|---|---|---|---|
| TW16 | FLT10*275 | S355J2N | 4 | 2989.9 | 1.62 | 61.3 |

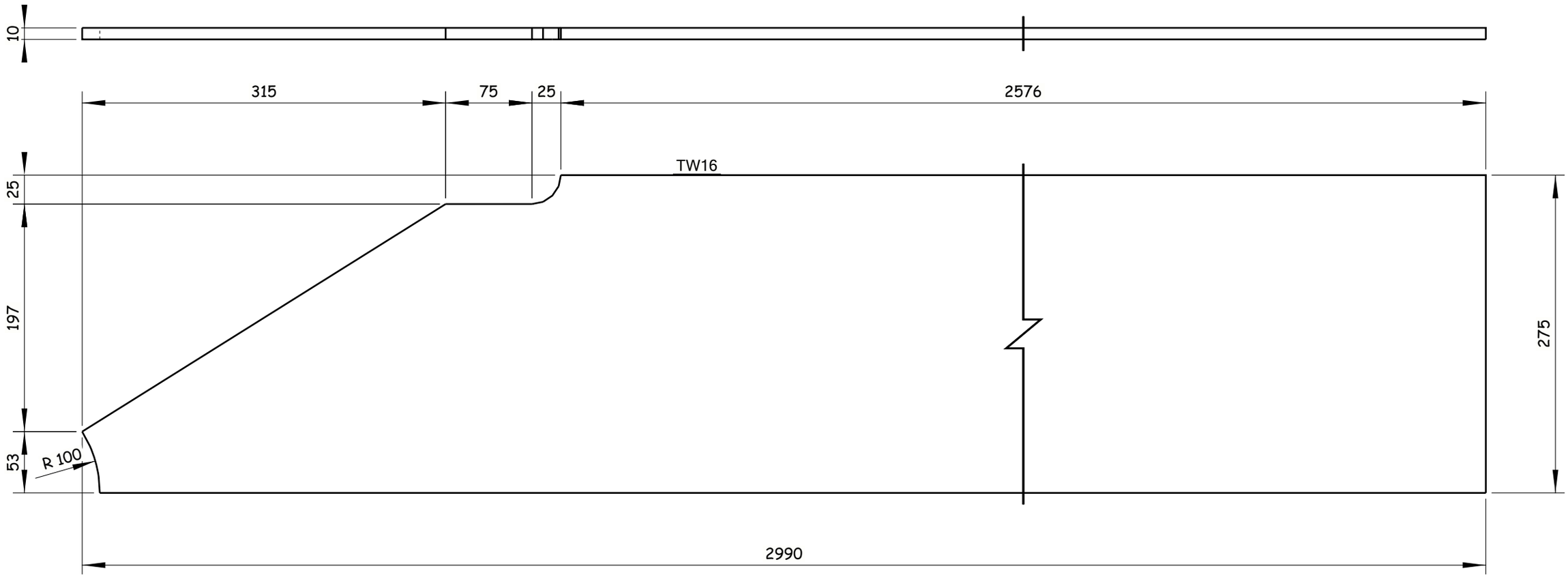


4 Nos. REQUIRED AS DRAWN E.SHTW16

Tekla Structures

GENERAL NOTES:

1. ALL DIMENSIONS ARE IN MILLIMETERS UNLESS OTHERWISE SPECIFIED.
2. LEVELS ARE IN METERS
3. DESIGN SERVICE LIFE OF 100 YEARS.
4. FLANGES OF TOP AND BOTTOM CHORDS TO BE SUPPLIED WITH IMPROVED THROUGH THICKNESS PROPERTIES Z25 ACCORDING TO EN10164.

REFERENCE DRAWINGS

| | |
|---|---|
| 1 | 93M-BOA-NAT-LOT-26612 |
| 2 | |
| 3 | |
| 4 | |
| 5 | |
| 6 | |
| 7 | |
| 8 | |
| 9 | |
| 10 | |
| 11 | |

6TH OF OCTOBER CITY RAIL TRANSIT MONORAIL &
NEW CAPITAL CITY RAIL TRANSIT MONORAIL

The Authority — Hill International — Authority Consultant
ORASCOM CONSTRUCTION — BOMBARDIER — Main Contractor
SENER — SHAKER CONSULTANCY GROUP — Designer

CONTRACTOR & CONSULTANT:
ENGINEERING HOUSE FOR CONSULTANCY

6 October Monorail
Engineering Unit
Valid For Construction

SCALE: AS SHOWN | SHOP DRAWING | DATE: 20.11.2024

DRAWING TITLE:
6TH OF OCTOBER MONORAIL
SHOP DRAWING FOR STRADDLE BENT 6OL11-22C2
STEEL RAFTER.
TW16

| REV | DATE | BY | DESCRIPTION | CHK | APD |
|---|---|---|---|---|---|
| A | 20-11-24 | E.SH | ISSUE FOR APPROVAL | A.SH | M.M |

| Project Code | Rubric | Initiator | Lot | Ref | Number | Revision |
|---|---|---|---|---|---|---|
| 93 | M0407 | ACC | 60L11 | DWG | 90567 | A |

REVIEWED WITH COMMENT
MONORAILS PROJECT

-Drawing shall be updated according to the comments on the GA drawing.
-Approval is subject to approval of coordination package between multi-disciplines.

All holes are 22mm U.N.O  Length & Area & Weight per piece

| Mark | Profile | Grade | QTY | Length | Area | Weight |
|---|---|---|---|---|---|---|
| TW17 | PL10*195.1 | S355J2N | 4 | 1447.7 | 0.60 | 22.1 |

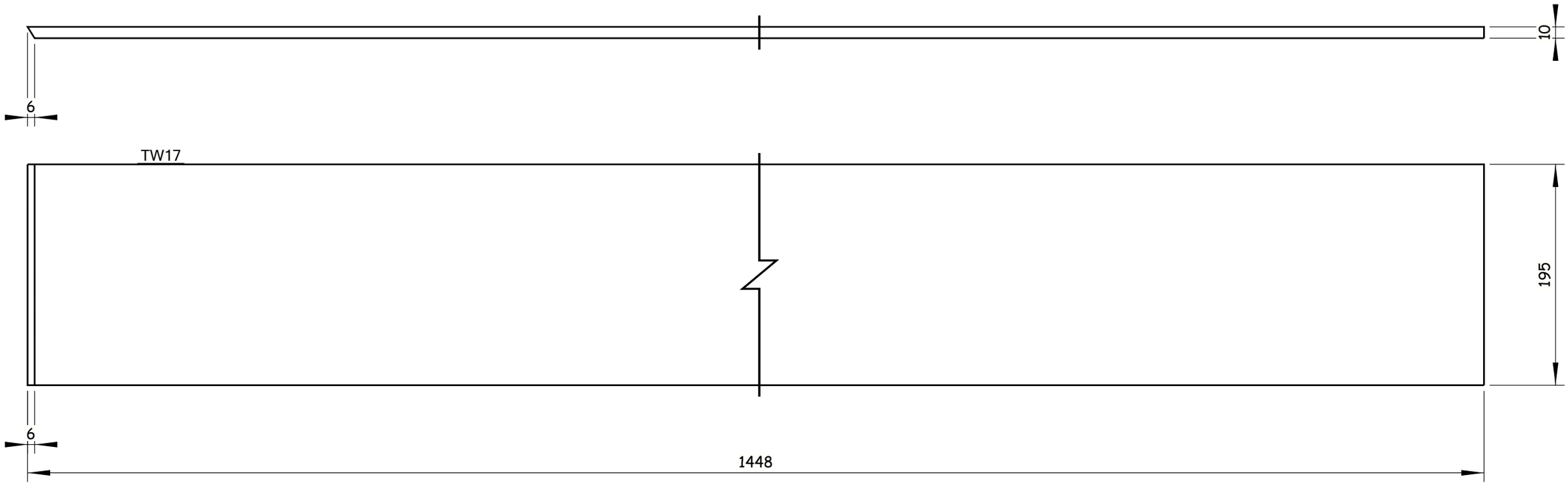


4 Nos. REQUIRED AS DRAWN E.SHTW17

Tekla Structures

GENERAL NOTES:

1. ALL DIMENSIONS ARE IN MILLIMETERS UNLESS OTHERWISE SPECIFIED.
2. LEVELS ARE IN METERS
3. DESIGN SERVICE LIFE OF 100 YEARS.
4. FLANGES OF TOP AND BOTTOM CHORDS TO BE SUPPLIED WITH IMPROVED THROUGH THICKNESS PROPERTIES Z25 ACCORDING TO EN10164.

REFERENCE DRAWINGS

| | |
|---|---|
| 1 | 93M-BOA-NAT-LOT-26612 |
| 2 | |
| 3 | |
| 4 | |
| 5 | |
| 6 | |
| 7 | |
| 8 | |
| 9 | |
| 10 | |
| 11 | |

6TH OF OCTOBER CITY RAIL TRANSIT MONORAIL &
NEW CAPITAL CITY RAIL TRANSIT MONORAIL

The Authority — Authority Consultant
Main Contractor
Designer

CONTRACTOR & CONSULTANT:
ENGINEERING HOUSE FOR CONSULTANCY

SCALE: AS SHOWN | CHK'D DRAWING | DATE: 20.11.2024

| REV | DATE | BY | DESCRIPTION | CHK | APD |
|---|---|---|---|---|---|
| A | 20-11-24 | E.SH | ISSUE FOR APPROVAL | A.SH | M.M |

6 October Monorail
Engineering Unit
Valid For Construction

DRAWING TITLE:
6TH OF OCTOBER MONORAIL
**SHOP DRAWING FOR STRADDLE BENT 6OL11-22C2**
**STEEL RAFTER.**
TW17

| Project Code | Rubric | Initiator | Lot | Ref | Number | Revision |
|---|---|---|---|---|---|---|
| 93M | 04 07 | ACC | 60 L11 | DWG | 90568 | A |

REVIEWED WITH COMMENT
MONORAILS PROJECT

-Drawing shall be updated according to the comments on the GA drawing.
-Approval is subject to approval of coordination package between multi-disciplines.

All holes are 22mm U.N.O  Length & Area & Weight per piece

| Mark | Profile | Grade | QTY | Length | Area | Weight |
|---|---|---|---|---|---|---|
| TW18 | PL10*195.1 | S355J2N | 4 | 441.4 | 0.18 | 6.7 |

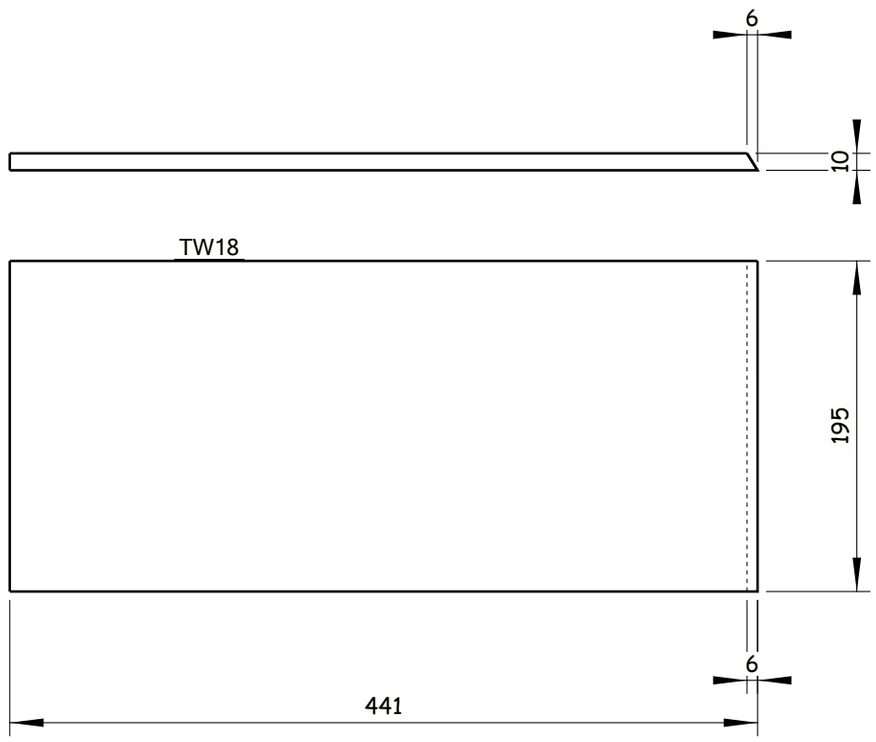


4 Nos. REQUIRED AS DRAWN E.SHTW18

6 October Monorail Engineering Unit
Valid For Construction

Tekla Structures

GENERAL NOTES:

1. ALL DIMENSIONS ARE IN MILLIMETERS UNLESS OTHERWISE SPECIFIED.
2. LEVELS ARE IN METERS
3. DESIGN SERVICE LIFE OF 100 YEARS.
4. FLANGES OF TOP AND BOTTOM CHORDS TO BE SUPPLIED WITH IMPROVED THROUGH THICKNESS PROPERTIES Z25 ACCORDING TO EN10164.

REFERENCE DRAWINGS

| | |
|---|---|
| 1 | 93M-BOA-NAT-LOT-26612 |
| 2 | |
| 3 | |
| 4 | |
| 5 | |
| 6 | |
| 7 | |
| 8 | |
| 9 | |
| 10 | |
| 11 | |

6TH OF OCTOBER CITY RAIL TRANSIT MONORAIL &
NEW CAPITAL CITY RAIL TRANSIT MONORAIL

The Authority
Hill International
Authority Consultant

ORASCOM CONSTRUCTION
Main Contractor

BOMBARDIER
SENER
SHAKER CONSULTANCY GROUP
Designer

CONTRACTOR / CONSULTANT :
ENGINEERING HOUSE FOR CONSULTANCY

SCALE: AS SHOWN | SHOP DRAWING | DATE: 20.11.2024

DRAWING TITLE:
6TH OF OCTOBER MONORAIL
SHOP DRAWING FOR STRADDLE BENT 6OL11-22C2
STEEL RAFTER.
TW18

| REV | DATE | BY | DESCRIPTION | CHK | APD |
|---|---|---|---|---|---|
| A | 20-11-24 | E.SH | ISSUE FOR APPROVAL | A.SH | M.M |

| Project Code | Rubric | Initiator | Lot | Ref | Number | Revision |
|---|---|---|---|---|---|---|
| 93 | M0407 | ACC | 60L11 | DWG | 90569 | A |

REVIEWED WITH COMMENT
MONORAILS PROJECT

-Drawing shall be updated according to the comments on the GA drawing.
-Approval is subject to approval of coordination package between multi-disciplines.

All holes are 22mm U.N.O Length & Area & Weight per piece

| Mark | Profile | Grade | QTY | Length | Area | Weight |
|---|---|---|---|---|---|---|
| TW19 | PL10*195.1 | S355J2N | 4 | 946.6 | 0.39 | 14.4 |

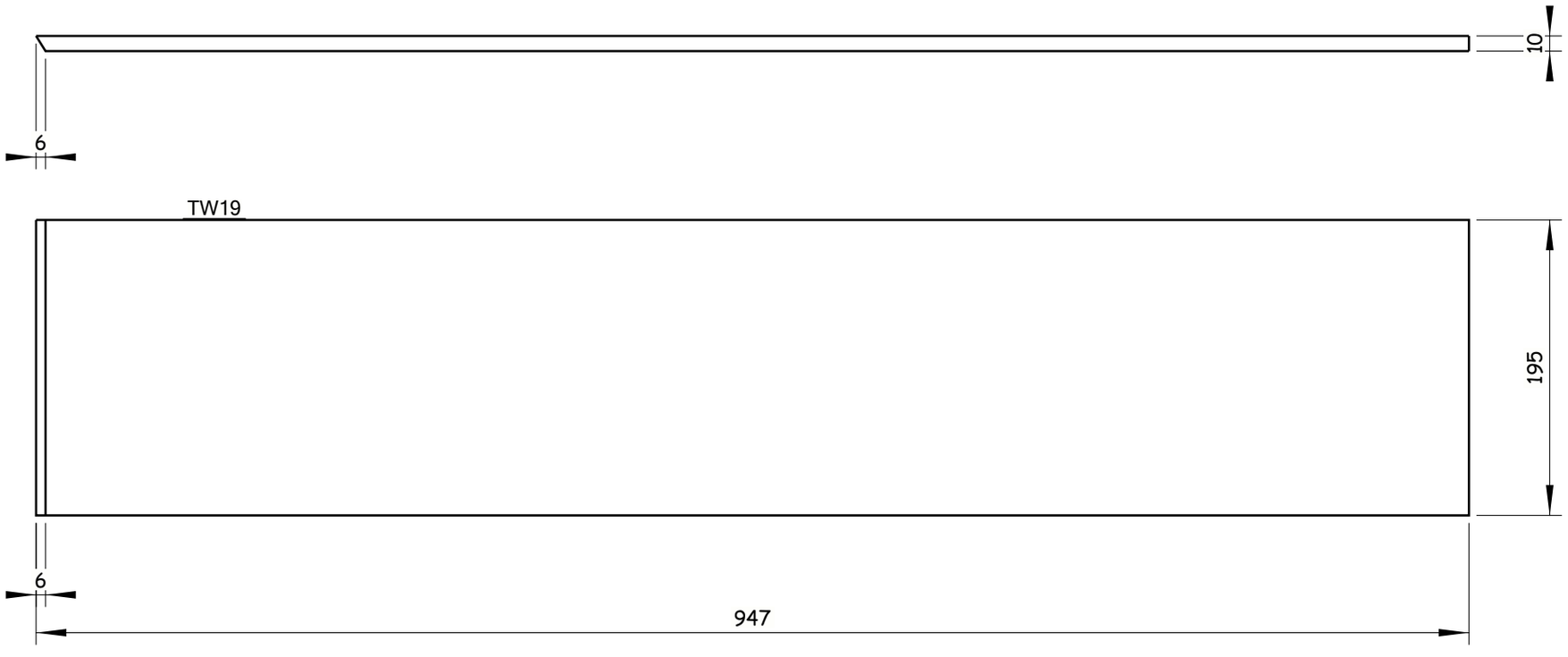


4 Nos. REQUIRED AS DRAWN E.SHTW19

Tekla Structures

GENERAL NOTES:

1. ALL DIMENSIONS ARE IN MILLIMETERS UNLESS OTHERWISE SPECIFIED.
2. LEVELS ARE IN METERS
3. DESIGN SERVICE LIFE OF 100 YEARS.
4. FLANGES OF TOP AND BOTTOM CHORDS TO BE SUPPLIED WITH IMPROVED THROUGH THICKNESS PROPERTIES Z25 ACCORDING TO EN10164.

REFERENCE DRAWINGS

| | |
|---|---|
| 1 | 93M-BOA-NAT-LOT-26612 |
| 2 | |
| 3 | |
| 4 | |
| 5 | |
| 6 | |
| 7 | |
| 8 | |
| 9 | |
| 10 | |
| 11 | |

6TH OF OCTOBER CITY RAIL TRANSIT MONORAIL &
NEW CAPITAL CITY RAIL TRANSIT MONORAIL

The Authority
Hill International
Authority Consultant

Main Contractor

Designer

CONTRACTOR & CONSULTANT:
ENGINEERING HOUSE FOR CONSULTANCY

SCALE: AS SHOWN | CHK'D DRAWING | DATE: 20.11.2024

| REV | DATE | BY | DESCRIPTION | CHK | APD |
|---|---|---|---|---|---|
| A | 20-11-24 | E.SH | ISSUE FOR APPROVAL | A.SH | M.M |

6 October Monorail
Engineering Unit
Valid For Construction

DRAWING TITLE:
6TH OF OCTOBER MONORAIL
**SHOP DRAWING FOR STRADDLE BENT 6OL11-22C2**
**STEEL RAFTER.**
TW19

| Project Code | Rubric | Initiator | Lot | Ref | Number | Revision |
|---|---|---|---|---|---|---|
| 93 | M04 | 07 | ACC | 60 | L11 | DWG | 90570 | A |

| All holes are 22mm U.N.O Length & Area & Weight per piece | | | | | | |
|---|---|---|---|---|---|---|
| TW20 | PL10*195.1 | S355J2N | 4 | 942.5 | 0.39 | 14.4 |
| Mark | Profile | Grade | QTY | Length | Area | Weight |

REVIEWED WITH COMMENT MONORAILS PROJECT

-Drawing shall be updated according to the comments on the GA drawing.
-Approval is subject to approval of coordination package between multi-disciplines.

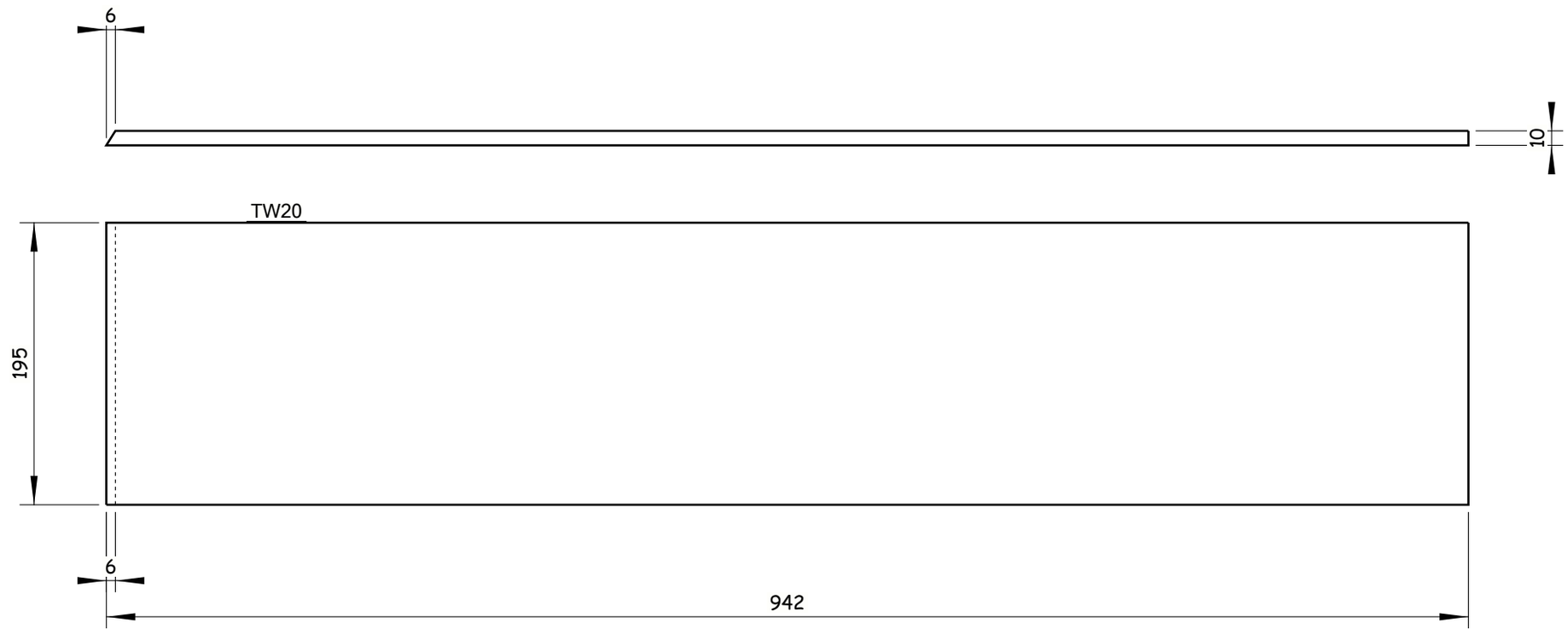


4 Nos. REQUIRED AS DRAWN E.SHTW20

6 October Monorail Engineering Unit
Valid For Construction

GENERAL NOTES:

1. ALL DIMENSIONS ARE IN MILLIMETERS UNLESS OTHERWISE SPECIFIED.
2. LEVELS ARE IN METERS
3. DESIGN SERVICE LIFE OF 100 YEARS.
4. FLANGES OF TOP AND BOTTOM CHORDS TO BE SUPPLIED WITH IMPROVED THROUGH THICKNESS PROPERTIES Z25 ACCORDING TO EN10164.

REFERENCE DRAWINGS

| | |
|---|---|
| 1 | 93M-BOA-NAT-LOT-26612 |
| 2 | |
| 3 | |
| 4 | |
| 5 | |
| 6 | |
| 7 | |
| 8 | |
| 9 | |
| 10 | |
| 11 | |

6TH OF OCTOBER CITY RAIL TRANSIT MONORAIL & NEW CAPITAL CITY RAIL TRANSIT MONORAIL

وزارة النقل
MINISTRY OF TRANSPORT
The Authority
Hill International
Authority Consultant

ORASCOM CONSTRUCTION
BOMBARDIER
Main Contractor

SENER
SHAKER CONSULTANCY GROUP
Designer

CONTRACTOR CONSULTANT:
EHC
ENGINEERING HOUSE FOR CONSULTANCY

| SCALE | SHOP DRAWING | DATE |
|---|---|---|
| AS SHOWN | | 20.11.2024 |

| REV | DATE | BY | DESCRIPTION | CHK | APD |
|---|---|---|---|---|---|
| A | 20-11-24 | E.SH | ISSUE FOR APPROVAL | A.SH | M.M |

DRAWING TITLE:
6TH OF OCTOBER MONORAIL
**SHOP DRAWING FOR STRADDLE BENT 6OL11-22C2**
**STEEL RAFTER.**
TW20

| Project Code | Rubric | Initiator | Lot | Ref | Number | Revision |
|---|---|---|---|---|---|---|
| 93M | 0407 | ACC | 60L11 | DWG | 90571 | A |

Tekla Structures

REVIEWED WITH COMMENT
MONORAILS PROJECT

-Drawing shall be updated according to the comments on the GA drawing.
-Approval is subject to approval of coordination package between multi-disciplines.

All holes are 22mm U.N.O Length & Area & Weight per piece

| Mark | Profile | Grade | QTY | Length | Area | Weight |
|---|---|---|---|---|---|---|
| TW21 | PL10*195.1 | S355J2N | 4 | 445.6 | 0.19 | 6.8 |

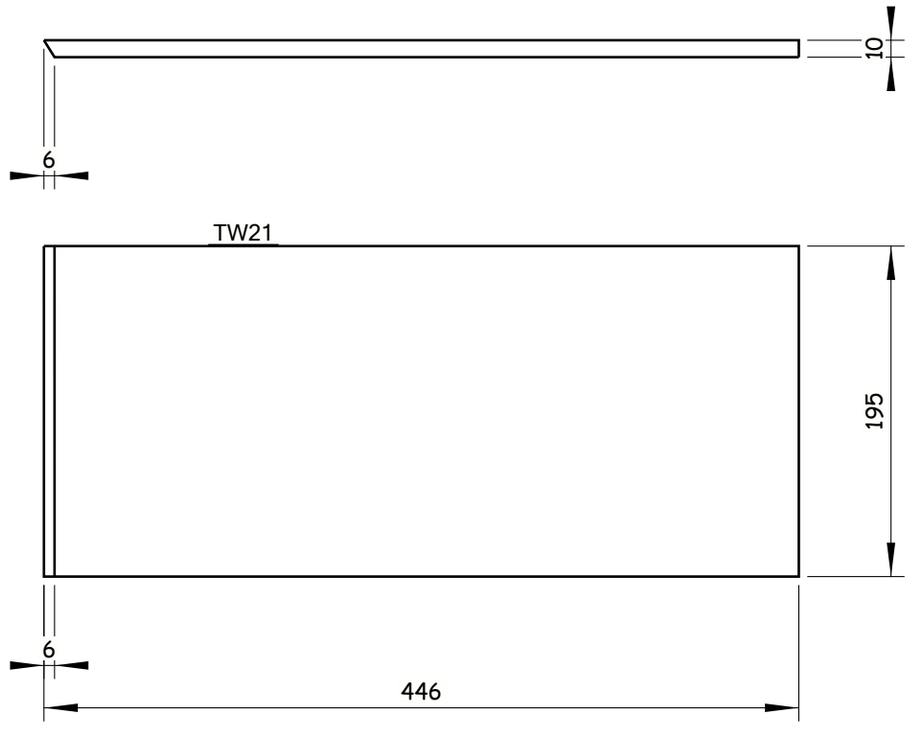


4 Nos. REQUIRED AS DRAWN E.SHTW21

Tekla Structures

GENERAL NOTES:

1. ALL DIMENSIONS ARE IN MILLIMETERS UNLESS OTHERWISE SPECIFIED.
2. LEVELS ARE IN METERS
3. DESIGN SERVICE LIFE OF 100 YEARS.
4. FLANGES OF TOP AND BOTTOM CHORDS TO BE SUPPLIED WITH IMPROVED THROUGH THICKNESS PROPERTIES Z25 ACCORDING TO EN10164.

REFERENCE DRAWINGS

| | |
|---|---|
| 1 | 93M-BOA-NAT-LOT-26612 |
| 2 | |
| 3 | |
| 4 | |
| 5 | |
| 6 | |
| 7 | |
| 8 | |
| 9 | |
| 10 | |
| 11 | |

6TH OF OCTOBER CITY RAIL TRANSIT MONORAIL &
NEW CAPITAL CITY RAIL TRANSIT MONORAIL

The Authority
Hill International
Authority Consultant

Main Contractor

Designer

CONTRACTOR & CONSULTANT:
ENGINEERING HOUSE FOR CONSULTANCY

SCALE: AS SHOWN | CHK'D DRAWING | DATE: 20.11.2024

| REV | DATE | BY | DESCRIPTION | CHK | APD |
|---|---|---|---|---|---|
| A | 20-11-24 | E.SH | ISSUE FOR APPROVAL | A.SH | M.M |

6 October Monorail
Engineering Unit
Valid For Construction

DRAWING TITLE:
6TH OF OCTOBER MONORAIL
**SHOP DRAWING FOR STRADDLE BENT 6OL11-22C2**
**STEEL RAFTER.**
TW21

| Project Code | Rubric | Initiator | Lot | Ref | Number | Revision |
|---|---|---|---|---|---|---|
| 93 | M04 | 07 | ACC | 60 | L11 | DWG | 90572 | A |

| All holes are 22mm U.N.O Length & Area & Weight per piece | | | | | | |
|---|---|---|---|---|---|---|
| TW22 | PL10*195.1 | S355J2N | 4 | 1443.5 | 0.60 | 22.1 |
| Mark | Profile | Grade | QTY | Length | Area | Weight |

REVIEWED WITH COMMENT MONORAILS PROJECT

-Drawing shall be updated according to the comments on the GA drawing.
-Approval is subject to approval of coordination package between multi-disciplines.

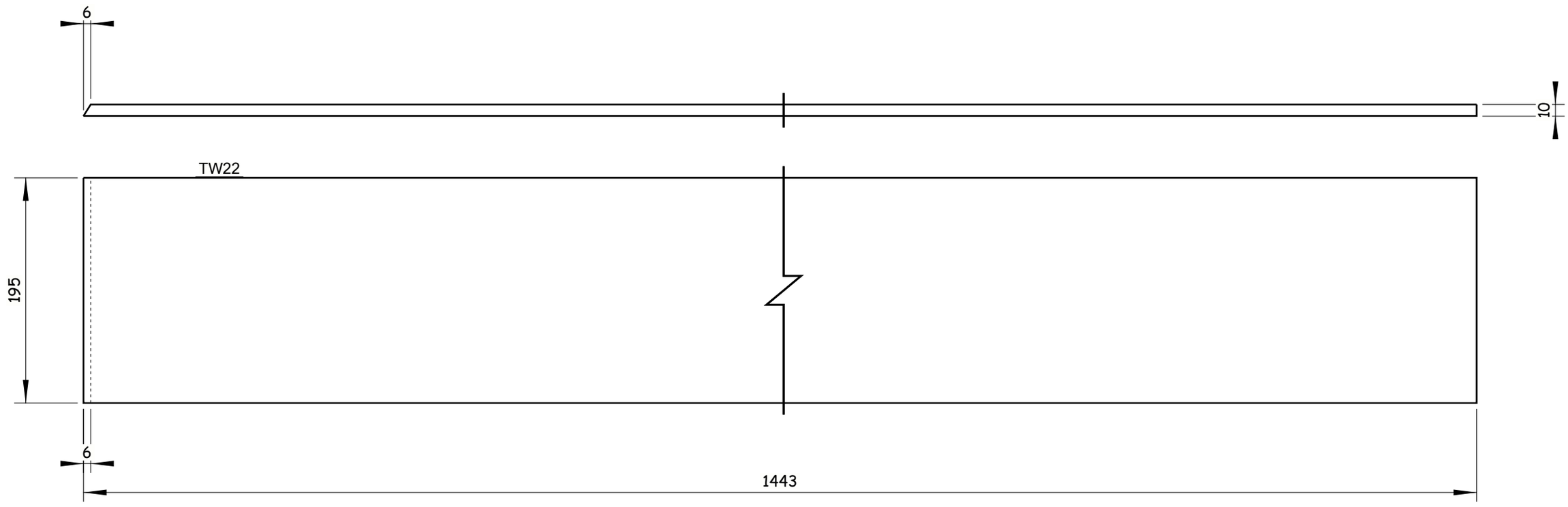


4 Nos. REQUIRED AS DRAWN E.SHTW22

6 October Monorail Engineering Unit
Valid For Construction

GENERAL NOTES:

1. ALL DIMENSIONS ARE IN MILLIMETERS UNLESS OTHERWISE SPECIFIED.
2. LEVELS ARE IN METERS
3. DESIGN SERVICE LIFE OF 100 YEARS.
4. FLANGES OF TOP AND BOTTOM CHORDS TO BE SUPPLIED WITH IMPROVED THROUGH THICKNESS PROPERTIES Z25 ACCORDING TO EN10164.

REFERENCE DRAWINGS

| | |
|---|---|
| 1 | 93M-BOA-NAT-LOT-26612 |
| 2 | |
| 3 | |
| 4 | |
| 5 | |
| 6 | |
| 7 | |
| 8 | |
| 9 | |
| 10 | |
| 11 | |

6TH OF OCTOBER CITY RAIL TRANSIT MONORAIL & NEW CAPITAL CITY RAIL TRANSIT MONORAIL

وزارة النقل
MINISTRY OF TRANSPORT
The Authority
Hill International
Authority Consultant

ORASCOM CONSTRUCTION
BOMBARDIER
Main Contractor

SENER
SHAKER CONSULTANCY GROUP
Designer

CONTRACTOR CONSULTANT:
MEHC
ENGINEERING HOUSE FOR CONSULTANCY

| SCALE | SHOP DRAWING | DATE |
|---|---|---|
| AS SHOWN | | 20.11.2024 |

| REV | DATE | BY | DESCRIPTION | CHK | APD |
|---|---|---|---|---|---|
| A | 20-11-24 | E.SH | ISSUE FOR APPROVAL | A.SH | M.M |

DRAWING TITLE:
6TH OF OCTOBER MONORAIL
**SHOP DRAWING FOR STRADDLE BENT 6OL11-22C2**
**STEEL RAFTER.**
TW22

| Project Code | Rubric | Initiator | Lot | Ref | Number | Revision |
|---|---|---|---|---|---|---|
| 93M | 0407 | ACC | 6OL11 | DWG | 90573 | A |

Tekla Structures

REVIEWED WITH COMMENT
MONORAILS PROJECT

-Drawing shall be updated according to the comments on the GA drawing.
-Approval is subject to approval of coordination package between multi-disciplines.

All holes are 22mm U.N.O Length & Area & Weight per piece

| Mark | Profile | Grade | QTY | Length | Area | Weight |
|---|---|---|---|---|---|---|
| TW23 | FLT10*200 | S355J2N | 4 | 1323.7 | 0.53 | 19.8 |

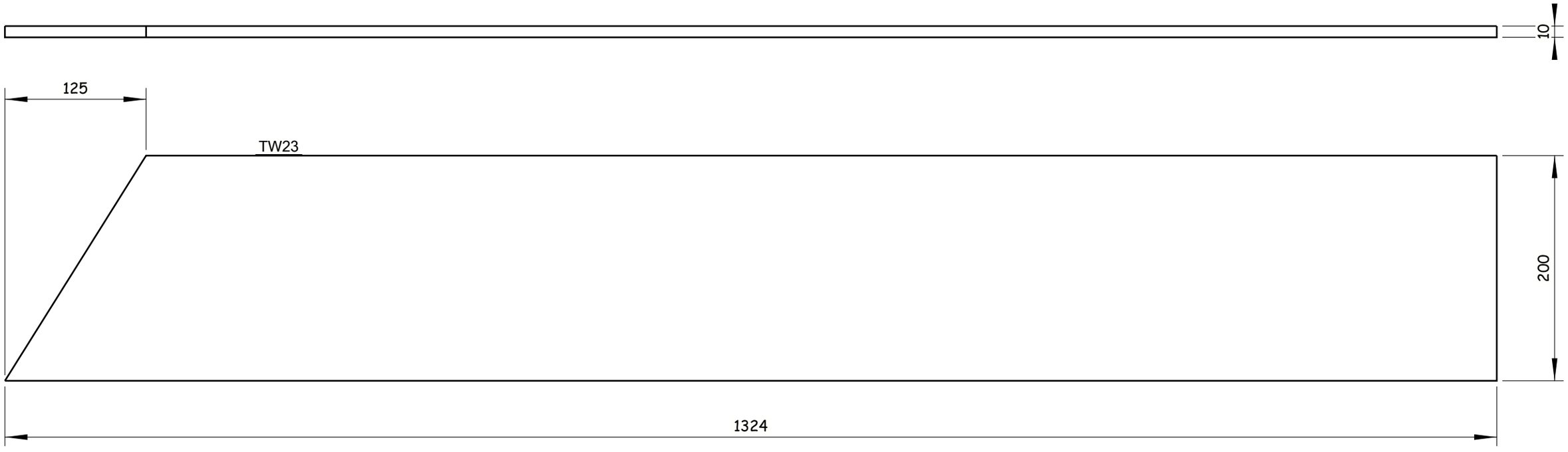


4 Nos. REQUIRED AS DRAWN E.SHTW23

6 October Monorail
Engineering Unit
Valid For Cönstruction

Tekla Structures

GENERAL NOTES:

1. ALL DIMENSIONS ARE IN MILLIMETERS UNLESS OTHERWISE SPECIFIED.
2. LEVELS ARE IN METERS
3. DESIGN SERVICE LIFE OF 100 YEARS.
4. FLANGES OF TOP AND BOTTOM CHORDS TO BE SUPPLIED WITH IMPROVED THROUGH THICKNESS PROPERTIES Z25 ACCORDING TO EN10164.

REFERENCE DRAWINGS

| | |
|---|---|
| 1 | 93M-BOA-NAT-LOT-26612 |
| 2 | |
| 3 | |
| 4 | |
| 5 | |
| 6 | |
| 7 | |
| 8 | |
| 9 | |
| 10 | |
| 11 | |

6TH OF OCTOBER CITY RAIL TRANSIT MONORAIL &
NEW CAPITAL CITY RAIL TRANSIT MONORAIL

The Authority
Hill International
Authority Consultant

Main Contractor

Designer

CONTRACTOR
CONSULTANT :

ENGINEERING HOUSE FOR CONSULTANCY

SCALE: AS SHOWN | CHD.DRWING | DATE: 20.11.2024

| REV | DATE | BY | DESCRIPTION | CHK | APD |
|---|---|---|---|---|---|
| A | 20-11-24 | E.SH | ISSUE FOR APPROVAL | A.SH | M.M |

DRAWING TITLE:
6TH OF OCTOBER MONORAIL
**SHOP DRAWING FOR STRADDLE BENT 6OL11-22C2**
**STEEL RAFTER.**
TW23

| Project Code | Rubric | Initiator | Lot | Ref | Number | Revision |
|---|---|---|---|---|---|---|
| 93M | 04 07 | ACC | 60L11 | DWG | 90574 | A |

REVIEWED WITH COMMENT
MONORAILS PROJECT

-Drawing shall be updated according to the comments on the GA drawing.
-Approval is subject to approval of coordination package between multi-disciplines.

All holes are 22mm U.N.O  Length & Area & Weight per piece

| Mark | Profile | Grade | QTY | Length | Area | Weight |
|---|---|---|---|---|---|---|
| TW24 | PL10*231 | S355J2N | 4 | 2977.4 | 1.34 | 50.4 |

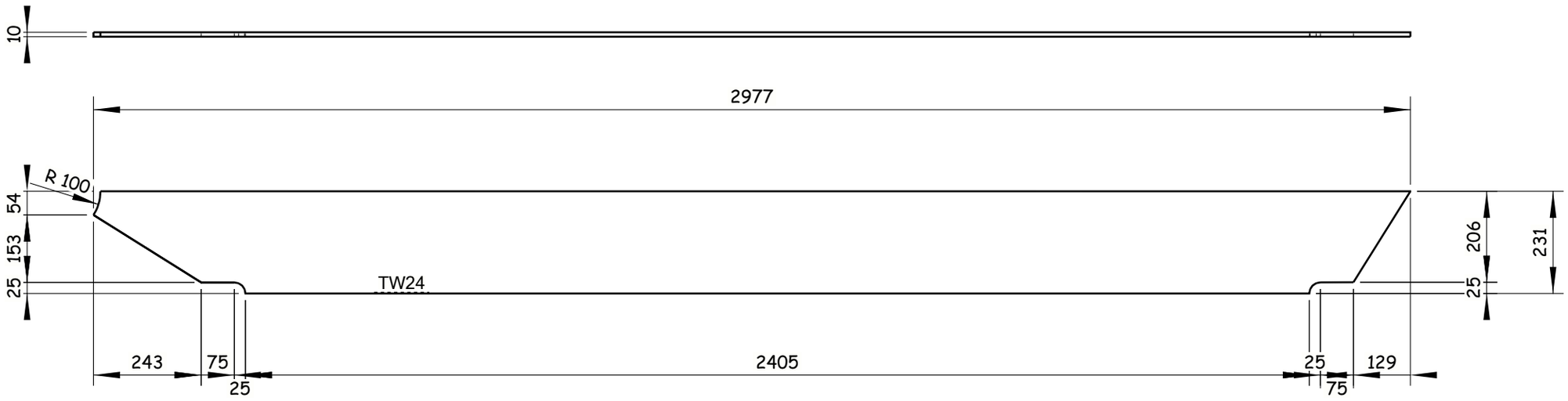


4 Nos. REQUIRED AS DRAWN E.SHTW24

GENERAL NOTES:

1. ALL DIMENSIONS ARE IN MILLIMETERS UNLESS OTHERWISE SPECIFIED.
2. LEVELS ARE IN METERS
3. DESIGN SERVICE LIFE OF 100 YEARS.
4. FLANGES OF TOP AND BOTTOM CHORDS TO BE SUPPLIED WITH IMPROVED THROUGH THICKNESS PROPERTIES Z25 ACCORDING TO EN10164.

REFERENCE DRAWINGS

| | |
|---|---|
| 1 | 93M-BOA-NAT-LOT-26612 |
| 2 | |
| 3 | |
| 4 | |
| 5 | |
| 6 | |
| 7 | |
| 8 | |
| 9 | |
| 10 | |
| 11 | |

6TH OF OCTOBER CITY RAIL TRANSIT MONORAIL &
NEW CAPITAL CITY RAIL TRANSIT MONORAIL

The Authority
Hill International
Authority Consultant

Main Contractor

Designer

CONTRACTOR & CONSULTANT:
ENGINEERING HOUSE FOR CONSULTANCY

6 October Monorail
Engineering Unit
Valid For Construction

| SCALE | CHK'D DRAWING | DATE |
|---|---|---|
| AS SHOWN | | 20.11.2024 |

| REV | DATE | BY | DESCRIPTION | CHK | APD |
|---|---|---|---|---|---|
| A | 20-11-24 | E.SH | ISSUE FOR APPROVAL | A.SH | M.M |

DRAWING TITLE:
6TH OF OCTOBER MONORAIL
**SHOP DRAWING FOR STRADDLE BENT 6OL11-22C2**
**STEEL RAFTER.**
TW24

| Project Code | Rubric | Initiator | Lot | Ref | Number | Revision |
|---|---|---|---|---|---|---|
| 93 | M0407 | ACC | 60L11 | DWG | 90575 | A |

Tekla Structures

REVIEWED WITH COMMENT
MONORAILS PROJECT

-Drawing shall be updated according to the comments on the GA drawing.
-Approval is subject to approval of coordination package between multi-disciplines.

All holes are 22mm U.N.O Length & Area & Weight per piece

| Mark | Profile | Grade | QTY | Length | Area | Weight |
|---|---|---|---|---|---|---|
| TW25 | FLT10*200 | S355J2N | 4 | 981.0 | 0.42 | 15.4 |

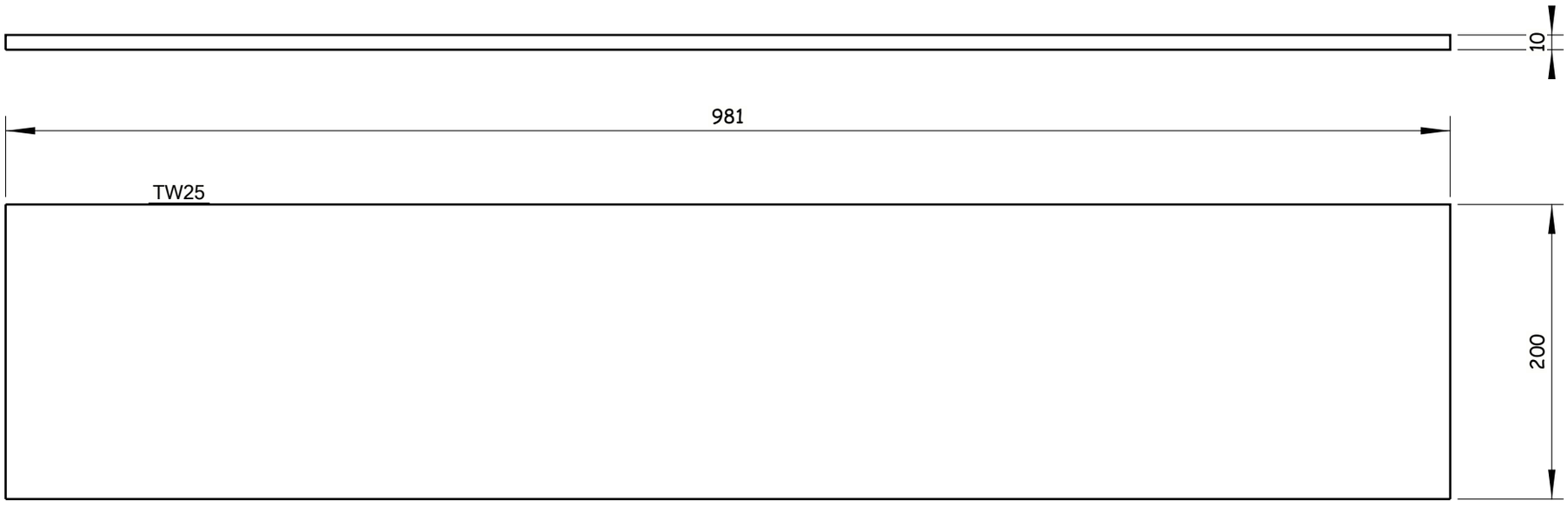


4 Nos. REQUIRED AS DRAWN E.SHTW25

Tekla Structures

GENERAL NOTES:

1. ALL DIMENSIONS ARE IN MILLIMETERS UNLESS OTHERWISE SPECIFIED.
2. LEVELS ARE IN METERS
3. DESIGN SERVICE LIFE OF 100 YEARS.
4. FLANGES OF TOP AND BOTTOM CHORDS TO BE SUPPLIED WITH IMPROVED THROUGH THICKNESS PROPERTIES Z25 ACCORDING TO EN10164.

REFERENCE DRAWINGS

| | |
|---|---|
| 1 | 93M-BOA-NAT-LOT-26612 |
| 2 | |
| 3 | |
| 4 | |
| 5 | |
| 6 | |
| 7 | |
| 8 | |
| 9 | |
| 10 | |
| 11 | |

6TH OF OCTOBER CITY RAIL TRANSIT MONORAIL &
NEW CAPITAL CITY RAIL TRANSIT MONORAIL

The Authority | Hill International Authority Consultant | ORASCOM CONSTRUCTION | BOMBARDIER | Main Contractor | SENER | SHAKER CONSULTING GROUP | Designer

CONTRACTOR / CONSULTANT:
ENGINEERING HOUSE FOR CONSULTANCY

6 October Monorail
Engineering Unit
Valid For Construction

| SCALE | SHOP DRAWING | DATE |
|---|---|---|
| AS SHOWN | | 20.11.2024 |

| REV | DATE | BY | DESCRIPTION | CHK | APD |
|---|---|---|---|---|---|
| A | 20-11-24 | E.SH | ISSUE FOR APPROVAL | A.SH | M.M |

DRAWING TITLE:
6TH OF OCTOBER MONORAIL
**SHOP DRAWING FOR STRADDLE BENT 6OL11-22C2**
**STEEL RAFTER.**
TW25

| Project Code | Rubric | Initiator | Lot | Ref | Number | Revision |
|---|---|---|---|---|---|---|
| 93 | M0407 | ACC | 60L11 | DWG | 90576 | A |

REVIEWED WITH COMMENT
MONORAILS PROJECT

-Drawing shall be updated according to the comments on the GA drawing.
-Approval is subject to approval of coordination package between multi-disciplines.

All holes are 22mm U.N.O Length & Area & Weight per piece

| Mark | Profile | Grade | QTY | Length | Area | Weight |
|---|---|---|---|---|---|---|
| TW26 | FLT10*200 | S355J2N | 1 | 5693.0 | 2.39 | 89.2 |

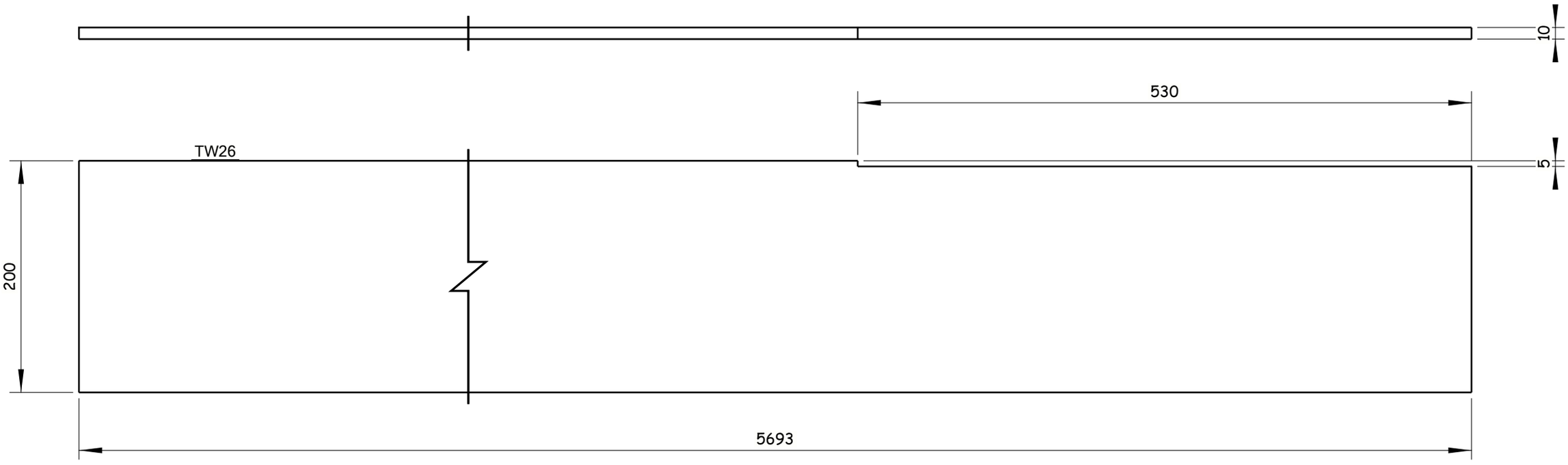


1 Nos. REQUIRED AS DRAWN E.SHTW26

Tekla Structures

GENERAL NOTES:

1. ALL DIMENSIONS ARE IN MILLIMETERS UNLESS OTHERWISE SPECIFIED.
2. LEVELS ARE IN METERS
3. DESIGN SERVICE LIFE OF 100 YEARS.
4. FLANGES OF TOP AND BOTTOM CHORDS TO BE SUPPLIED WITH IMPROVED THROUGH THICKNESS PROPERTIES Z25 ACCORDING TO EN10164.

REFERENCE DRAWINGS

| | |
|---|---|
| 1 | 93M-BOA-NAT-LOT-26612 |
| 2 | |
| 3 | |
| 4 | |
| 5 | |
| 6 | |
| 7 | |
| 8 | |
| 9 | |
| 10 | |
| 11 | |

6TH OF OCTOBER CITY RAIL TRANSIT MONORAIL &
NEW CAPITAL CITY RAIL TRANSIT MONORAIL

The Authority
Hill International
Authority Consultant

Main Contractor

Designer

CONTRACTOR & CONSULTANT:
ENGINEERING HOUSE FOR CONSULTANCY

6 October Monorail
Engineering Unit
Valid For Construction

SCALE: AS SHOWN | CHK'D DRAWING | DATE: 20.11.2024

| REV | DATE | BY | DESCRIPTION | CHK | APD |
|---|---|---|---|---|---|
| A | 20-11-24 | E.SH | ISSUE FOR APPROVAL | A.SH | M.M |

DRAWING TITLE:
6TH OF OCTOBER MONORAIL
**SHOP DRAWING FOR STRADDLE BENT 6OL11-22C2**
**STEEL RAFTER.**
TW26

| Project Code | Rubric | Initiator | Lot | Ref | Number | Revision |
|---|---|---|---|---|---|---|
| 93 | M0407 | ACC | 60L11 | DWG | 90577 | A |

REVIEWED WITH COMMENT
MONORAILS PROJECT

-Drawing shall be updated according to the comments on the GA drawing.
-Approval is subject to approval of coordination package between multi-disciplines.

All holes are 22mm U.N.O Length & Area & Weight per piece

| Mark | Profile | Grade | QTY | Length | Area | Weight |
|---|---|---|---|---|---|---|
| TW27 | FLT10*200 | S355J2N | 4 | 1680.0 | 0.70 | 26.2 |

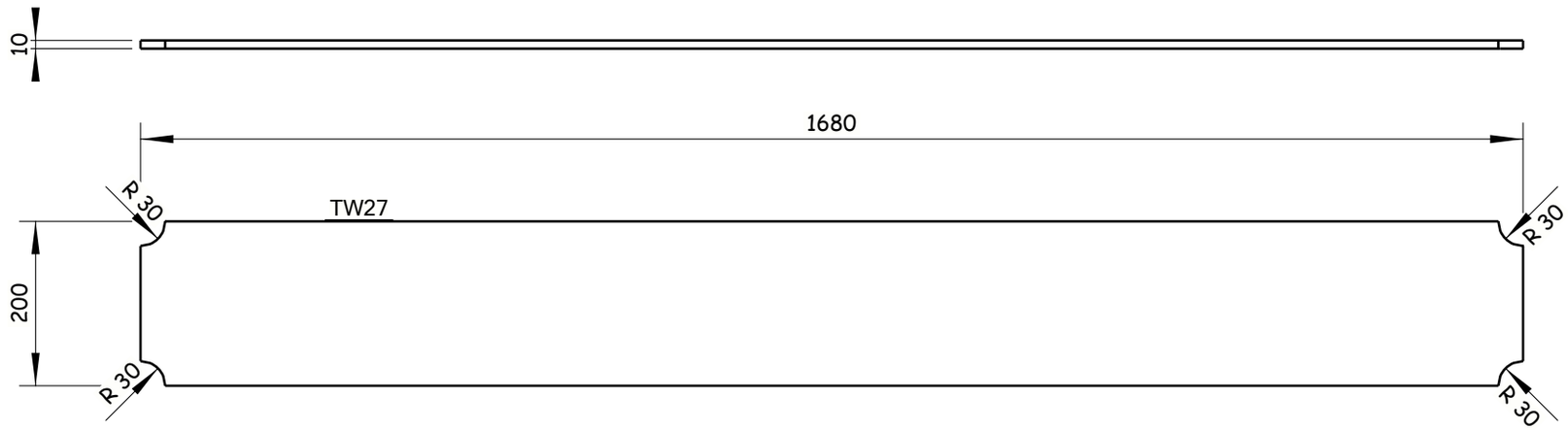


4 Nos. REQUIRED AS DRAWN E.SHTW27

Tekla Structures

GENERAL NOTES:

1. ALL DIMENSIONS ARE IN MILLIMETERS UNLESS OTHERWISE SPECIFIED.
2. LEVELS ARE IN METERS
3. DESIGN SERVICE LIFE OF 100 YEARS.
4. FLANGES OF TOP AND BOTTOM CHORDS TO BE SUPPLIED WITH IMPROVED THROUGH THICKNESS PROPERTIES Z25 ACCORDING TO EN10164.

REFERENCE DRAWINGS

| | |
|---|---|
| 1 | 93M-BOA-NAT-LOT-26612 |
| 2 | |
| 3 | |
| 4 | |
| 5 | |
| 6 | |
| 7 | |
| 8 | |
| 9 | |
| 10 | |
| 11 | |

6TH OF OCTOBER CITY RAIL TRANSIT MONORAIL &
NEW CAPITAL CITY RAIL TRANSIT MONORAIL

The Authority
Hill International
Authority Consultant

ORASCOM CONSTRUCTION
Main Contractor

BOMBARDIER
SENER
SHAKER CONSULTANCY GROUP
Designer

CONTRACTOR / CONSULTANT:
ENGINEERING HOUSE FOR CONSULTANCY

6 October Monorail
Engineering Unit
Valid For Construction

| SCALE | CHD'DRAWING | DATE |
|---|---|---|
| AS SHOWN | | 20.11.2024 |

| REV | DATE | BY | DESCRIPTION | CHK | APD |
|---|---|---|---|---|---|
| A | 20-11-24 | E.SH | ISSUE FOR APPROVAL | A.SH | M.M |

DRAWING TITLE:
6TH OF OCTOBER MONORAIL
**SHOP DRAWING FOR STRADDLE BENT 6OL11-22C2**
**STEEL RAFTER.**
TW27

| Project Code | Rubric | Initiator | Lot | Ref | Number | Revision |
|---|---|---|---|---|---|---|
| 93 | M0407 | ACC | 60L11 | DWG | 90578 | A |

REVIEWED WITH COMMENT
MONORAILS PROJECT

-Drawing shall be updated according to the comments on the GA drawing.
-Approval is subject to approval of coordination package between multi-disciplines.

All holes are 22mm U.N.O Length & Area & Weight per piece

| Mark | Profile | Grade | QTY | Length | Area | Weight |
|---|---|---|---|---|---|---|
| TW28 | FLT10*200 | S355J2N | 2 | 3894.0 | 1.63 | 60.9 |

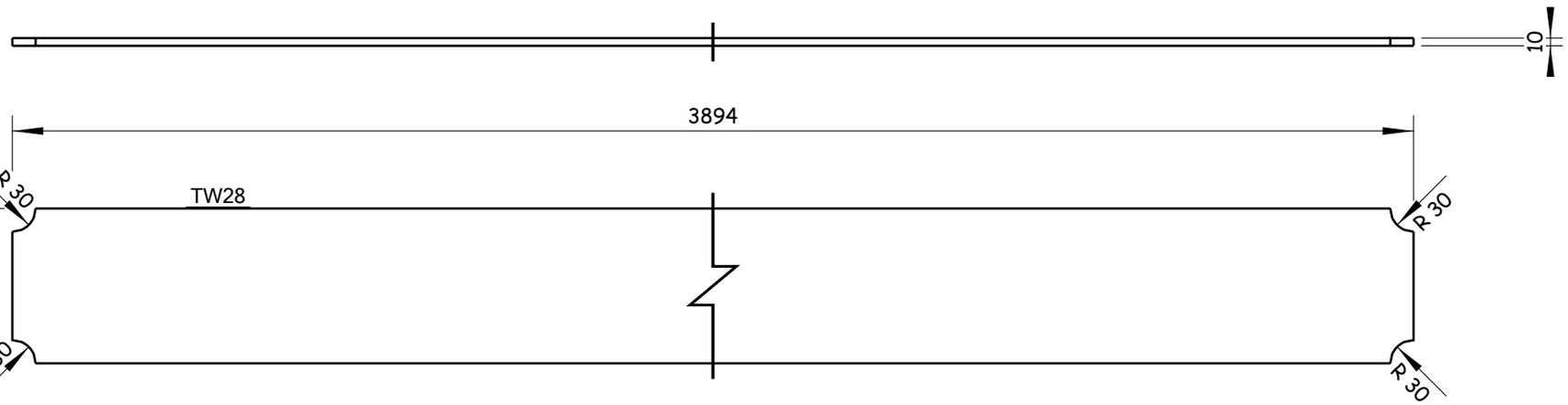


2 Nos. REQUIRED AS DRAWN E.SHTW28

Tekla Structures

GENERAL NOTES:

1. ALL DIMENSIONS ARE IN MILLIMETERS UNLESS OTHERWISE SPECIFIED.
2. LEVELS ARE IN METERS
3. DESIGN SERVICE LIFE OF 100 YEARS.
4. FLANGES OF TOP AND BOTTOM CHORDS TO BE SUPPLIED WITH IMPROVED THROUGH THICKNESS PROPERTIES Z25 ACCORDING TO EN10164.

REFERENCE DRAWINGS

| | |
|---|---|
| 1 | 93M-BOA-NAT-LOT-26612 |
| 2 | |
| 3 | |
| 4 | |
| 5 | |
| 6 | |
| 7 | |
| 8 | |
| 9 | |
| 10 | |
| 11 | |

6TH OF OCTOBER CITY RAIL TRANSIT MONORAIL &
NEW CAPITAL CITY RAIL TRANSIT MONORAIL

The Authority
Hill International
Authority Consultant

ORASCOM CONSTRUCTION
Main Contractor

BOMBARDIER
SENER
SHAKER CONSULTANCY GROUP
Designer

CONTRACTOR / CONSULTANT:
ENGINEERING HOUSE FOR CONSULTANCY

6 October Monorail
Engineering Unit
Valid For Construction

| SCALE | CHD/DRWING | DATE |
|---|---|---|
| AS SHOWN | | 20.11.2024 |

| REV | DATE | BY | DESCRIPTION | CHK | APD |
|---|---|---|---|---|---|
| A | 20-11-24 | E.SH | ISSUE FOR APPROVAL | A.SH | M.M |

DRAWING TITLE:
6TH OF OCTOBER MONORAIL
**SHOP DRAWING FOR STRADDLE BENT 6OL11-22C2**
**STEEL RAFTER.**
TW28

| Project Code | Rubric | Initiator | Lot | Ref | Number | Revision |
|---|---|---|---|---|---|---|
| 93M | 0407 | ACC | 60L11 | DWG | 90579 | A |

REVIEWED WITH COMMENT
MONORAILS PROJECT

-Drawing shall be updated according to the comments on the GA drawing.
-Approval is subject to approval of coordination package between multi-disciplines.

All holes are 22mm U.N.O Length & Area & Weight per piece

| Mark | Profile | Grade | QTY | Length | Area | Weight |
|---|---|---|---|---|---|---|
| TW29 | FLT10*200 | S355J2N | 5 | 12000.0 | 5.04 | 188.4 |

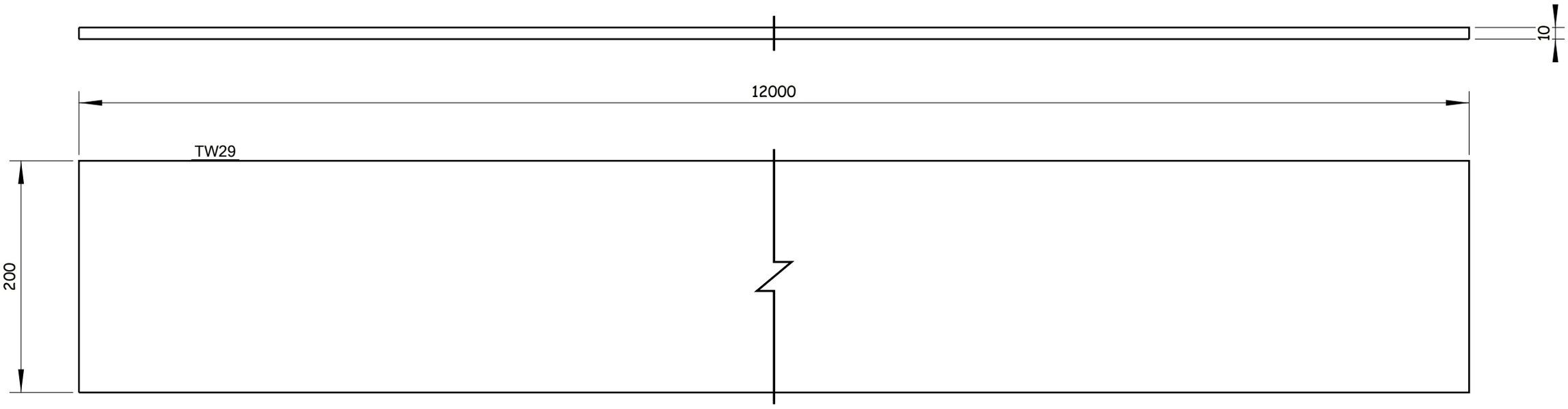


5 Nos. REQUIRED AS DRAWN E.SHTW29

6 October Monorail
Engineering Unit
Valid For Construction

Tekla Structures

GENERAL NOTES:

1. ALL DIMENSIONS ARE IN MILLIMETERS UNLESS OTHERWISE SPECIFIED.
2. LEVELS ARE IN METERS
3. DESIGN SERVICE LIFE OF 100 YEARS.
4. FLANGES OF TOP AND BOTTOM CHORDS TO BE SUPPLIED WITH IMPROVED THROUGH THICKNESS PROPERTIES Z25 ACCORDING TO EN10164.

REFERENCE DRAWINGS

| | |
|---|---|
| 1 | 93M-BOA-NAT-LOT-26612 |
| 2 | |
| 3 | |
| 4 | |
| 5 | |
| 6 | |
| 7 | |
| 8 | |
| 9 | |
| 10 | |
| 11 | |

6TH OF OCTOBER CITY RAIL TRANSIT MONORAIL &
NEW CAPITAL CITY RAIL TRANSIT MONORAIL

The Authority
Hill International
Authority Consultant

Main Contractor

Designer

CONTRACTOR & CONSULTANT:
ENGINEERING HOUSE FOR CONSULTANCY

SCALE: AS SHOWN
CHK'D DRAWING
DATE: 20.11.2024

| REV | DATE | BY | DESCRIPTION | CHK | APD |
|---|---|---|---|---|---|
| A | 20-11-24 | E.SH | ISSUE FOR APPROVAL | A.SH | M.M |

DRAWING TITLE:
6TH OF OCTOBER MONORAIL
**SHOP DRAWING FOR STRADDLE BENT 6OL11-22C2**
**STEEL RAFTER.**
TW29

| Project Code | Rubric | Initiator | Lot | Ref | Number | Revision |
|---|---|---|---|---|---|---|
| 93 | M0407 | ACC | 60L11 | DWG | 90580 | A |

REVIEWED WITH COMMENT
MONORAILS PROJECT

-Drawing shall be updated according to the comments on the GA drawing.
-Approval is subject to approval of coordination package between multi-disciplines.

All holes are 22mm U.N.O  Length & Area & Weight per piece

| Mark | Profile | Grade | QTY | Length | Area | Weight |
|---|---|---|---|---|---|---|
| TW30 | FLT10*200 | S355J2N | 2 | 3951.5 | 1.60 | 59.6 |

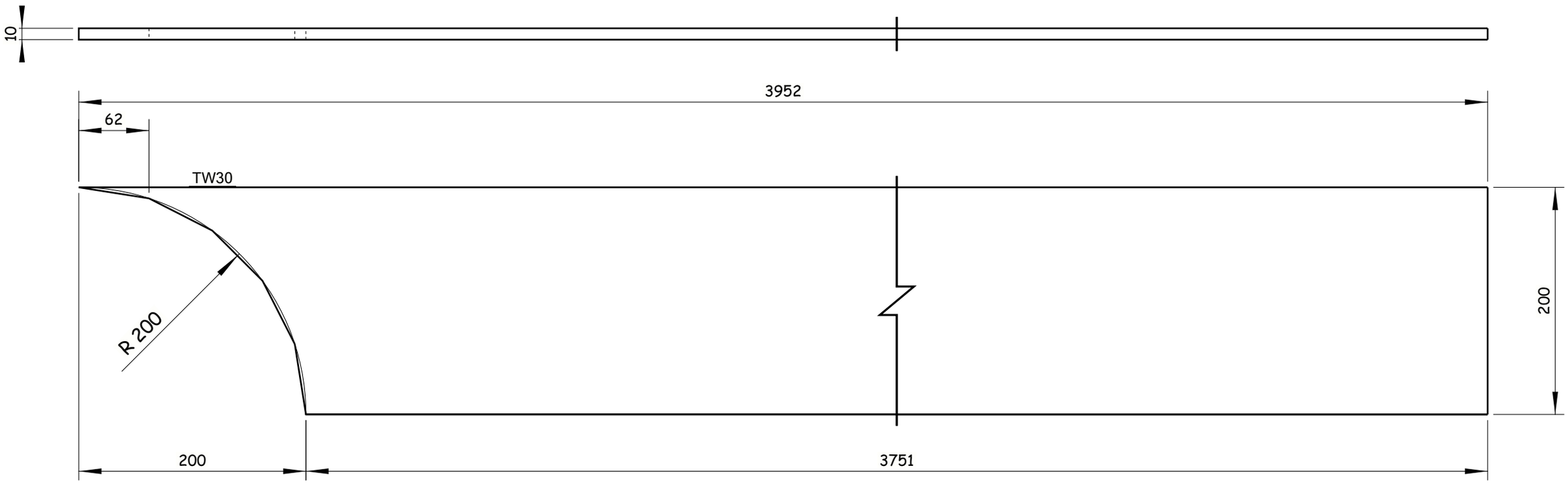


2 Nos. REQUIRED AS DRAWN E.SHTW30

Tekla Structures

GENERAL NOTES:

1. ALL DIMENSIONS ARE IN MILLIMETERS UNLESS OTHERWISE SPECIFIED.
2. LEVELS ARE IN METERS
3. DESIGN SERVICE LIFE OF 100 YEARS.
4. FLANGES OF TOP AND BOTTOM CHORDS TO BE SUPPLIED WITH IMPROVED THROUGH THICKNESS PROPERTIES Z25 ACCORDING TO EN10164.

REFERENCE DRAWINGS

| | |
|---|---|
| 1 | 93M-BOA-NAT-LOT-26612 |
| 2 | |
| 3 | |
| 4 | |
| 5 | |
| 6 | |
| 7 | |
| 8 | |
| 9 | |
| 10 | |
| 11 | |

6TH OF OCTOBER CITY RAIL TRANSIT MONORAIL &
NEW CAPITAL CITY RAIL TRANSIT MONORAIL

The Authority — Hill International — Authority Consultant
Main Contractor
Designer

CONTRACTOR & CONSULTANT:
ENGINEERING HOUSE FOR CONSULTANCY

6 October Monorail
Engineering Unit
Valid For Construction

SCALE: AS SHOWN | SHOP DRAWING | DATE: 20.11.2024

DRAWING TITLE:
6TH OF OCTOBER MONORAIL
SHOP DRAWING FOR STRADDLE BENT 6OL11-22C2
STEEL RAFTER.
TW30

| REV. | DATE | BY | DESCRIPTION | CHK | APD |
|---|---|---|---|---|---|
| A | 20-11-24 | E.SH | ISSUE FOR APPROVAL | A.SH | M.M |

| Project Code | Rubric | Initiator | Lot | Ref | Number | Revision |
|---|---|---|---|---|---|---|
| 93M | 04 | 07 | ACC | 60L11 | DWG | 90581 | A |

REVIEWED WITH COMMENT
MONORAILS PROJECT

-Drawing shall be updated according to the comments on the GA drawing.
-Approval is subject to approval of coordination package between multi-disciplines.

All holes are 22mm U.N.O Length & Area & Weight per piece

| Mark | Profile | Grade | QTY | Length | Area | Weight |
|---|---|---|---|---|---|---|
| TW31 | FLT10*200 | S355J2N | 2 | 12000.0 | 5.04 | 188.1 |

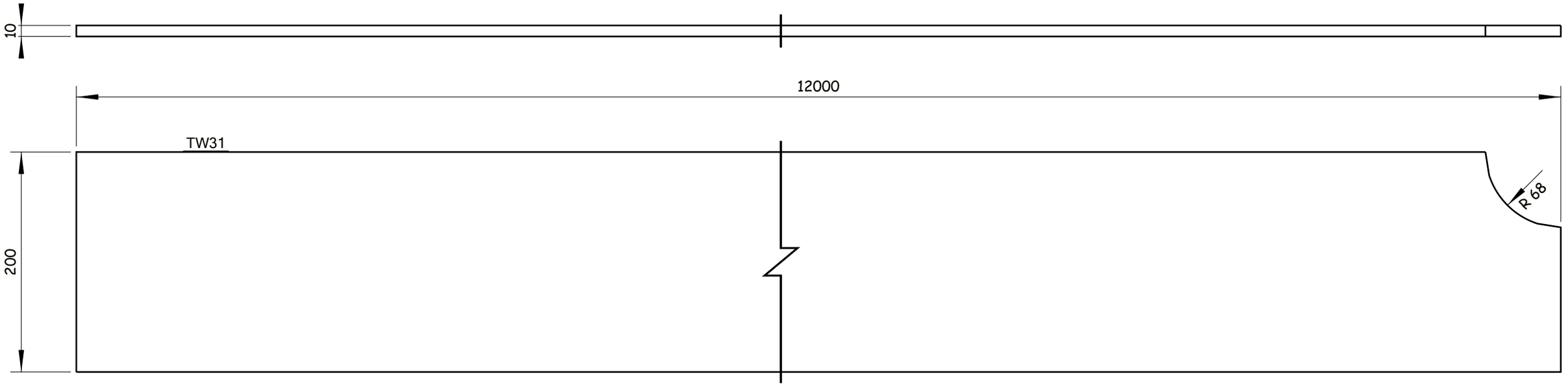


2 Nos. REQUIRED AS DRAWN E.SHTW31

6 October Monorail
Engineering Unit
Valid For Construction

Tekla Structures

GENERAL NOTES:

1. ALL DIMENSIONS ARE IN MILLIMETERS UNLESS OTHERWISE SPECIFIED.
2. LEVELS ARE IN METERS
3. DESIGN SERVICE LIFE OF 100 YEARS.
4. FLANGES OF TOP AND BOTTOM CHORDS TO BE SUPPLIED WITH IMPROVED THROUGH THICKNESS PROPERTIES Z25 ACCORDING TO EN10164.

REFERENCE DRAWINGS

| | |
|---|---|
| 1 | 93M-BOA-NAT-LOT-26612 |
| 2 | |
| 3 | |
| 4 | |
| 5 | |
| 6 | |
| 7 | |
| 8 | |
| 9 | |
| 10 | |
| 11 | |

6TH OF OCTOBER CITY RAIL TRANSIT MONORAIL &
NEW CAPITAL CITY RAIL TRANSIT MONORAIL

The Authority
Hill International
Authority Consultant

Main Contractor

Designer

CONTRACTOR
CONSULTANT :

ENGINEERING HOUSE FOR CONSULTANCY

SCALE
AS SHOWN

CHKD DRWING

DATE
20.11.2024

| REV | DATE | BY | DESCRIPTION | CHK | APD |
|---|---|---|---|---|---|
| A | 20-11-24 | E.SH | ISSUE FOR APPROVAL | A.SH | M.M |

DRAWING TITLE:
6TH OF OCTOBER MONORAIL
**SHOP DRAWING FOR STRADDLE BENT 6OL11-22C2**
**STEEL RAFTER.**
TW31

| Project Code | Rubric | Initiator | Lot | Ref | Number | Revision |
|---|---|---|---|---|---|---|
| 93M | 04 07 | ACC | 60L11 | DWG | 90582 | A |

REVIEWED WITH COMMENT
MONORAILS PROJECT

-Drawing shall be updated according to the comments on the GA drawing.
-Approval is subject to approval of coordination package between multi-disciplines.

All holes are 22mm U.N.O Length & Area & Weight per piece

| Mark | Profile | Grade | QTY | Length | Area | Weight |
|---|---|---|---|---|---|---|
| WP1 | PL20*948 | S355J2N | 2 | 3225.0 | 6.28 | 480.0 |

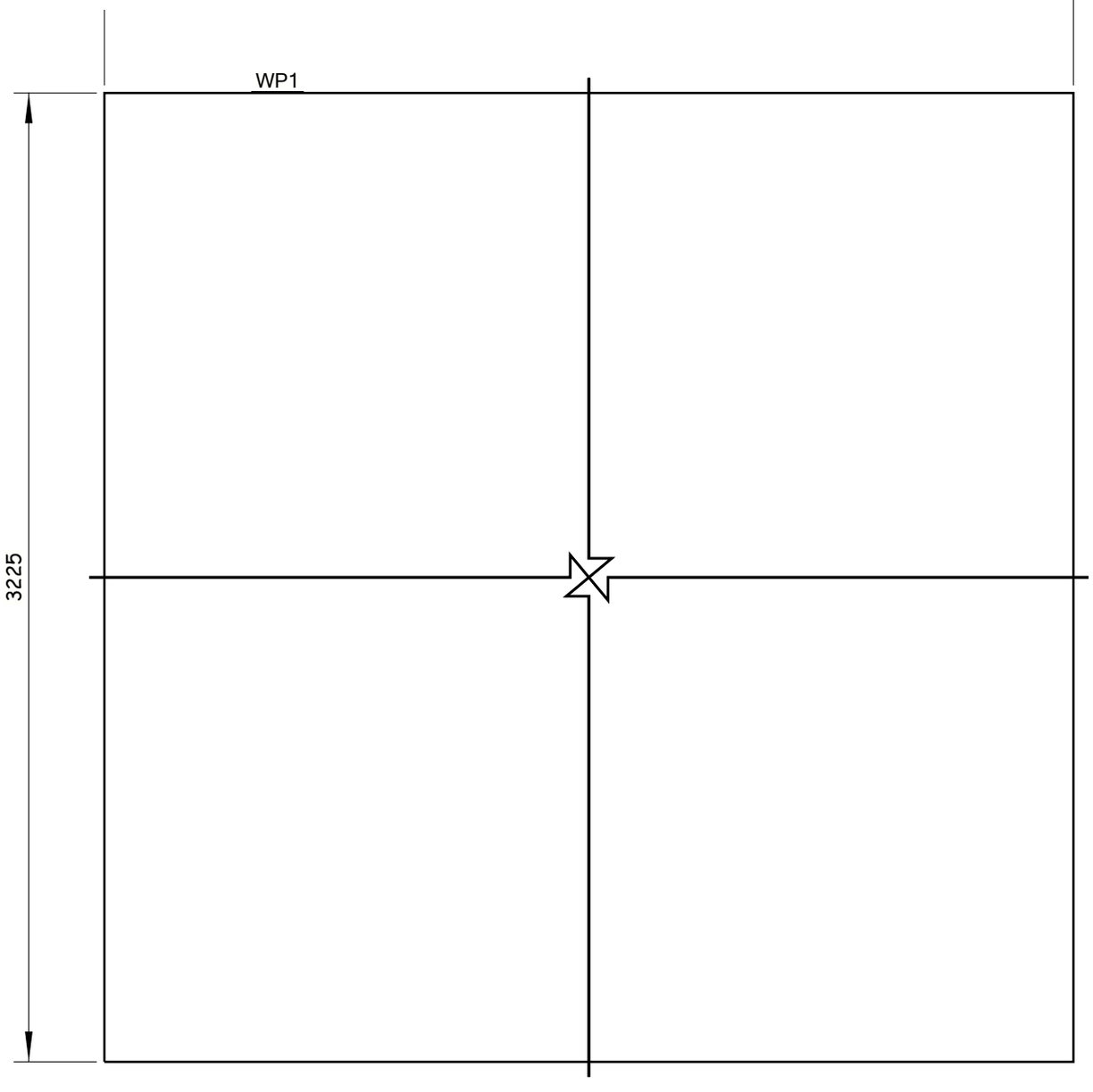


2 Nos. REQUIRED AS DRAWN E.SHWP1

Tekla Structures

GENERAL NOTES:

1. ALL DIMENSIONS ARE IN MILLIMETERS UNLESS OTHERWISE SPECIFIED.
2. LEVELS ARE IN METERS
3. DESIGN SERVICE LIFE OF 100 YEARS.
4. FLANGES OF TOP AND BOTTOM CHORDS TO BE SUPPLIED WITH IMPROVED THROUGH THICKNESS PROPERTIES Z25 ACCORDING TO EN10164.

REFERENCE DRAWINGS

| | |
|---|---|
| 1 | 93M-BOA-NAT-LOT-26612 |
| 2 | |
| 3 | |
| 4 | |
| 5 | |
| 6 | |
| 7 | |
| 8 | |
| 9 | |
| 10 | |
| 11 | |

6TH OF OCTOBER CITY RAIL TRANSIT MONORAIL &
NEW CAPITAL CITY RAIL TRANSIT MONORAIL

The Authority
Hill International
Authority Consultant

ORASCOM CONSTRUCTION
Main Contractor

BOMBARDIER
SENER
SHAKER CONSULTANCY GROUP
Designer

CONTRACTOR & CONSULTANT:
ENGINEERING HOUSE FOR CONSULTANCY

SCALE: AS SHOWN
CHK'D DRAWING
DATE: 20.11.2024

6 October Monorail
Engineering Unit
Valid For Construction

| REV | DATE | BY | DESCRIPTION | CHK | APD |
|---|---|---|---|---|---|
| A | 20-11-24 | E.SH | ISSUE FOR APPROVAL | A.SH | M.M |

DRAWING TITLE:
6TH OF OCTOBER MONORAIL
**SHOP DRAWING FOR STRADDLE BENT 6OL11-22C2**
**STEEL RAFTER.**
WP1

| Project Code | Rubric | Initiator | Lot | Ref | Number | Revision |
|---|---|---|---|---|---|---|
| 93M | 04 07 | ACC | 60 L 11 | DWG | 90583 | A |

REVIEWED WITH COMMENT
MONORAILS PROJECT

-Drawing shall be updated according to the comments on the GA drawing.
-Approval is subject to approval of coordination package between multi-disciplines.

| All holes are 22mm U.N.O Length & Area & Weight per piece | | | | | | |
|---|---|---|---|---|---|---|
| WP2 | PL25*2810 | S355J2N | 4 | 5095.0 | 28.12 | 2720.7 |
| Mark | Profile | Grade | QTY | Length | Area | Weight |

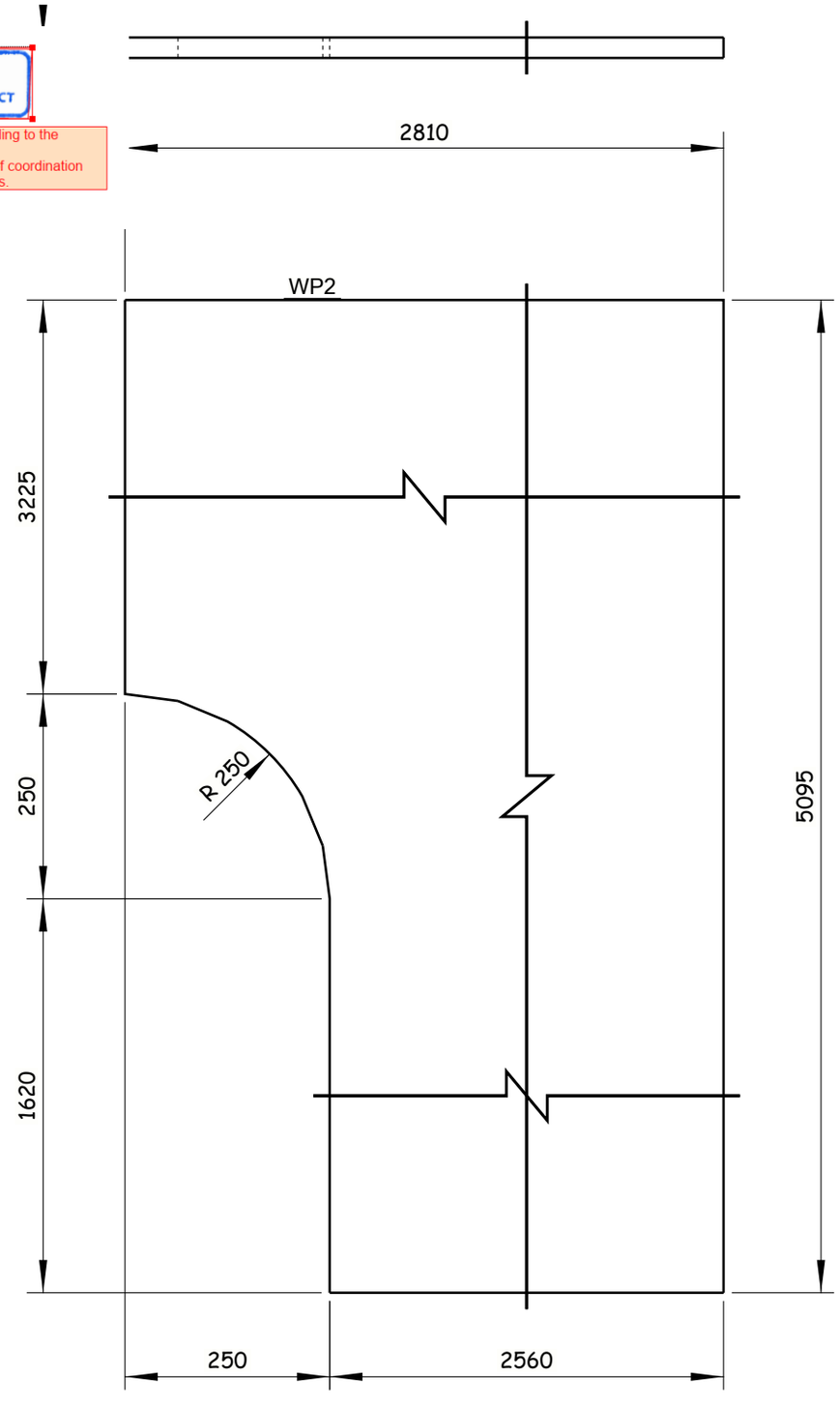


4 Nos. REQUIRED AS DRAWN E.SHWP2

Tekla Structures

GENERAL NOTES:

1. ALL DIMENSIONS ARE IN MILLIMETERS UNLESS OTHERWISE SPECIFIED.
2. LEVELS ARE IN METERS
3. DESIGN SERVICE LIFE OF 100 YEARS.
4. FLANGES OF TOP AND BOTTOM CHORDS TO BE SUPPLIED WITH IMPROVED THROUGH THICKNESS PROPERTIES Z25 ACCORDING TO EN10164.

REFERENCE DRAWINGS

| | |
|---|---|
| 1 | 93M-BOA-NAT-LOT-26612 |
| 2 | |
| 3 | |
| 4 | |
| 5 | |
| 6 | |
| 7 | |
| 8 | |
| 9 | |
| 10 | |
| 11 | |

6TH OF OCTOBER CITY RAIL TRANSIT MONORAIL &
NEW CAPITAL CITY RAIL TRANSIT MONORAIL

The Authority
Hill International
Authority Consultant
Main Contractor
Designer

CONTRACTOR / CONSULTANT:
ENGINEERING HOUSE FOR CONSULTANCY

6 October Monorail
Engineering Unit
Valid For Construction

| SCALE | SHOP DRAWING | DATE |
|---|---|---|
| AS SHOWN | | 20.11.2024 |

DRAWING TITLE:
6TH OF OCTOBER MONORAIL
**SHOP DRAWING FOR STRADDLE BENT 6OL11-22C2 STEEL RAFTER.**
WP2

| REV | DATE | BY | DESCRIPTION | CHK | APD |
|---|---|---|---|---|---|
| A | 20-11-24 | E.SH | ISSUE FOR APPROVAL | A.SH | M.M |

| Project Code | Rubric | Initiator | Lot | Ref | Number | Revision |
|---|---|---|---|---|---|---|
| 93M | 04 07 | ACC | 60L11 | DWG | 90584 | A |

REVIEWED WITH COMMENT
MONORAILS PROJECT

-Drawing shall be updated according to the comments on the GA drawing.
-Approval is subject to approval of coordination package between multi-disciplines.

All holes are 22mm U.N.O Length & Area & Weight per piece

| Mark | Profile | Grade | QTY | Length | Area | Weight |
|---|---|---|---|---|---|---|
| WP3 | PL20*3225 | S355J2N | 1 | 12000.0 | 77.95 | 6071.0 |

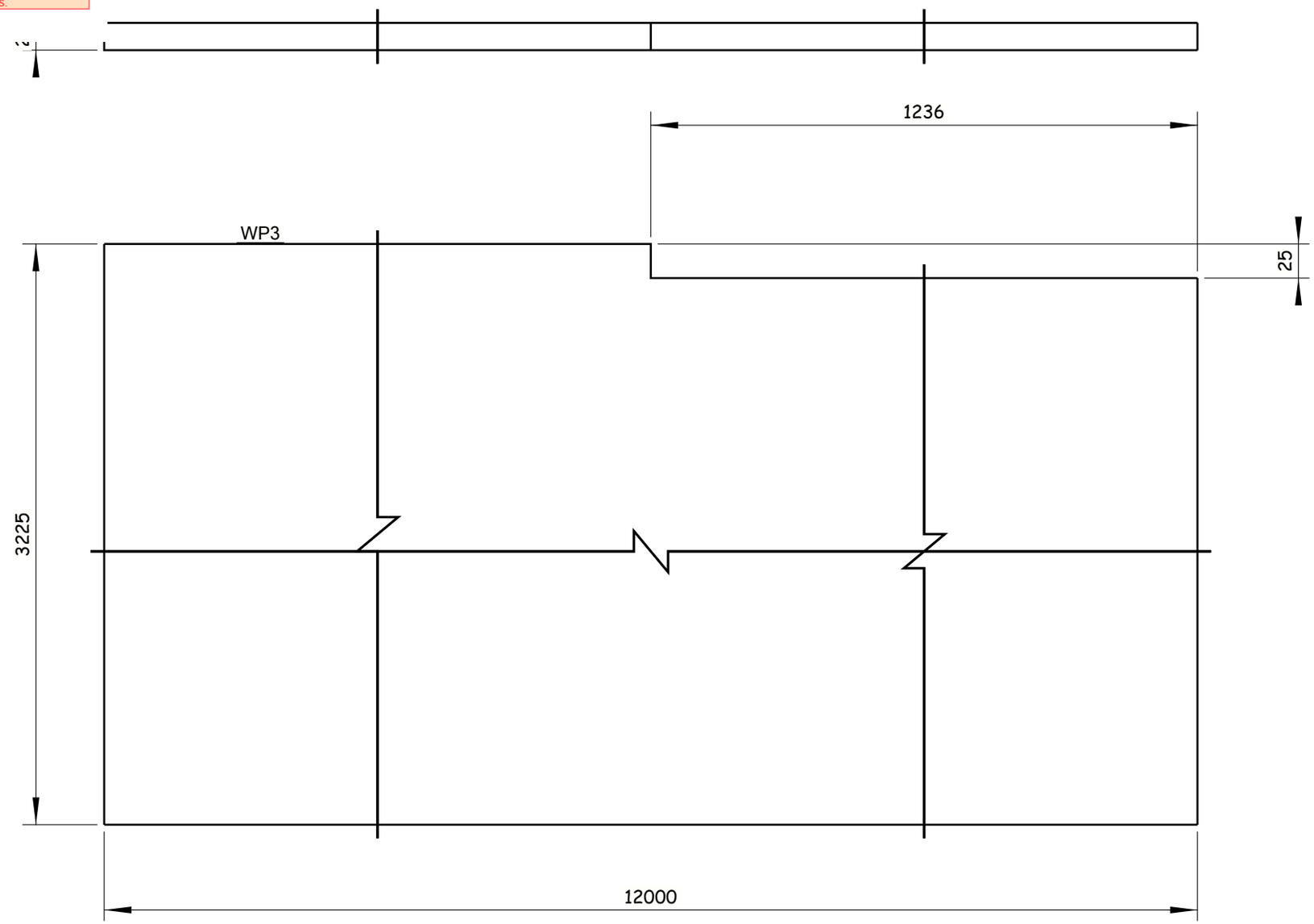


1 Nos. REQUIRED AS DRAWN E.SHWP3

Tekla Structures

GENERAL NOTES:

1. ALL DIMENSIONS ARE IN MILLIMETERS UNLESS OTHERWISE SPECIFIED.
2. LEVELS ARE IN METERS
3. DESIGN SERVICE LIFE OF 100 YEARS.
4. FLANGES OF TOP AND BOTTOM CHORDS TO BE SUPPLIED WITH IMPROVED THROUGH THICKNESS PROPERTIES Z25 ACCORDING TO EN10164.

REFERENCE DRAWINGS

| | |
|---|---|
| 1 | 93M-BOA-NAT-LOT-26612 |
| 2 | |
| 3 | |
| 4 | |
| 5 | |
| 6 | |
| 7 | |
| 8 | |
| 9 | |
| 10 | |
| 11 | |

6TH OF OCTOBER CITY RAIL TRANSIT MONORAIL &
NEW CAPITAL CITY RAIL TRANSIT MONORAIL

The Authority
Hill International
Authority Consultant

Main Contractor

Designer

CONTRACTOR / CONSULTANT:
ENGINEERING HOUSE FOR CONSULTANCY

SCALE: AS SHOWN | CHK'D DRAWING | DATE: 20.11.2024

| REV | DATE | BY | DESCRIPTION | CHK | APD |
|---|---|---|---|---|---|
| A | 20-11-24 | E.SH | ISSUE FOR APPROVAL | A.SH | M.M |

6 October Monorail
Engineering Unit
Valid For Construction

DRAWING TITLE:
6TH OF OCTOBER MONORAIL
SHOP DRAWING FOR STRADDLE BENT 6OL11-22C2
STEEL RAFTER.
WP3

| Project Code | Rubric | Initiator | Lot | Ref | Number | Revision |
|---|---|---|---|---|---|---|
| 93M | 0407 | ACC | 60L11 | DWG | 90585 | A |

REVIEWED WITH COMMENT
MONORAILS PROJECT

-Drawing shall be updated according to the comments on the GA drawing.
-Approval is subject to approval of coordination package between multi-disciplines.

| All holes are 22mm U.N.O Length & Area & Weight per piece | | | | | | |
|---|---|---|---|---|---|---|
| WP4 | PL35*1920 | S355K2N | 2 | 2350.0 | 8.74 | 1149.8 |
| Mark | Profile | Grade | QTY | Length | Area | Weight |

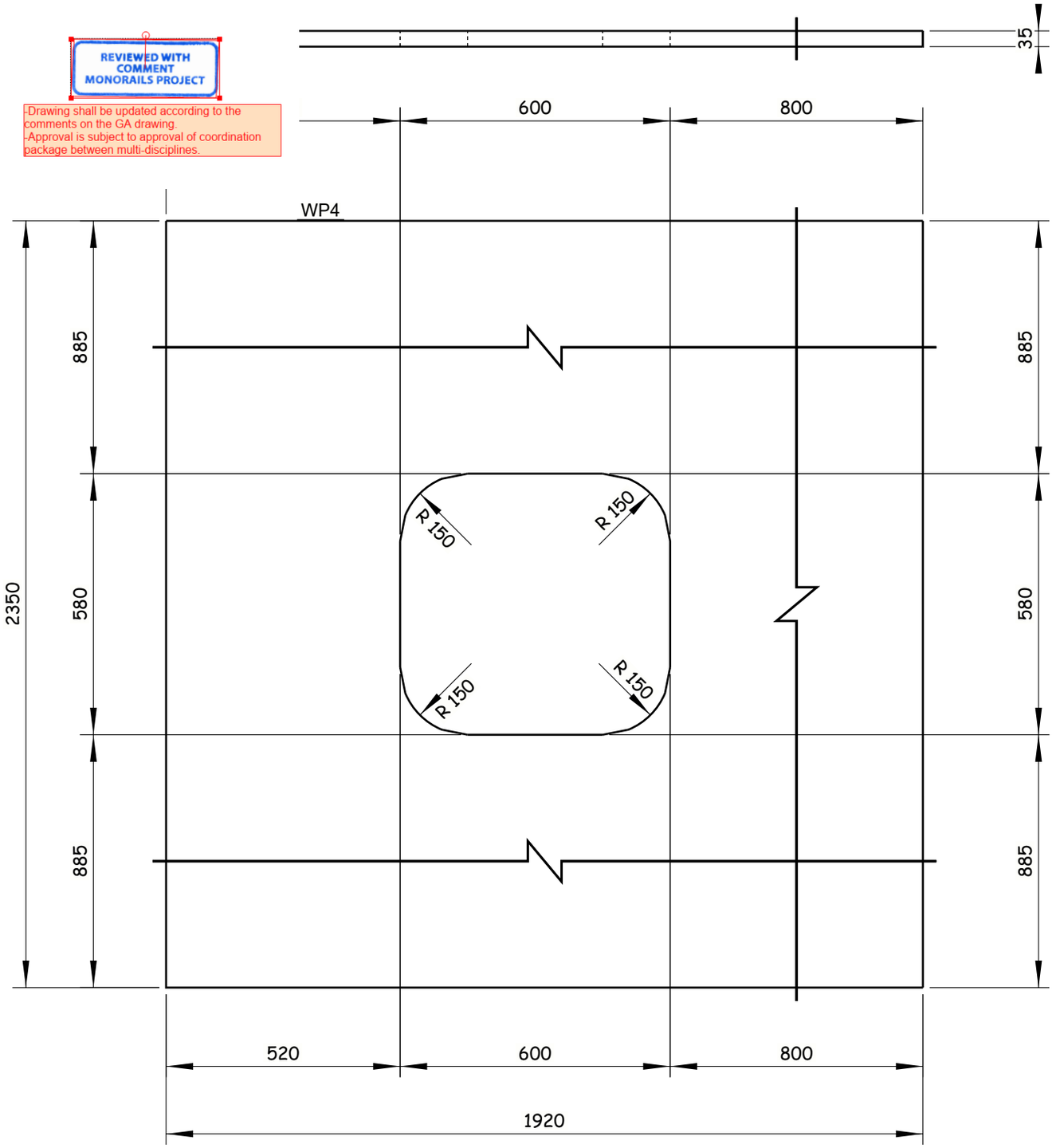


2 Nos. REQUIRED AS DRAWN E.SHWP4

Tekla Structures

GENERAL NOTES:

1. ALL DIMENSIONS ARE IN MILLIMETERS UNLESS OTHERWISE SPECIFIED.
2. LEVELS ARE IN METERS
3. DESIGN SERVICE LIFE OF 100 YEARS.
4. FLANGES OF TOP AND BOTTOM CHORDS TO BE SUPPLIED WITH IMPROVED THROUGH THICKNESS PROPERTIES Z25 ACCORDING TO EN10164.

REFERENCE DRAWINGS

| | |
|---|---|
| 1 | 93M-BOA-NAT-LOT-26612 |
| 2 | |
| 3 | |
| 4 | |
| 5 | |
| 6 | |
| 7 | |
| 8 | |
| 9 | |
| 10 | |
| 11 | |

6TH OF OCTOBER CITY RAIL TRANSIT MONORAIL &
NEW CAPITAL CITY RAIL TRANSIT MONORAIL

The Authority
Hill International
Authority Consultant

ORASCOM CONSTRUCTION
Main Contractor

BOMBARDIER
SENER
SHAKER CONSULTANCY GROUP
Designer

CONTRACTOR & CONSULTANT:
ENGINEERING HOUSE FOR CONSULTANCY

6 October Monorail
Engineering Unit
Valid For Construction

| SCALE | SHOP DRAWING | DATE |
|---|---|---|
| AS SHOWN | | 20.11.2024 |

| REV | DATE | BY | DESCRIPTION | CHK | APD |
|---|---|---|---|---|---|
| A | 20-11-24 | E.SH | ISSUE FOR APPROVAL | A.SH | M.M |

DRAWING TITLE:
6TH OF OCTOBER MONORAIL
**SHOP DRAWING FOR STRADDLE BENT 6OL11-22C2**
**STEEL RAFTER.**
WP4

| Project Code | Rubric | Initiator | Lot | Ref | Number | Revision |
|---|---|---|---|---|---|---|
| 9 3 M 0 4 0 7 | A C C | 6 0 L 1 1 | D W G | | 90586 | A |

REVIEWED WITH COMMENT
MONORAILS PROJECT

-Drawing shall be updated according to the comments on the GA drawing.
-Approval is subject to approval of coordination package between multi-disciplines.

| All holes are 22mm U.N.O Length & Area & Weight per piece | | | | | | |
|---|---|---|---|---|---|---|
| WP5 | PL35*2350 | S355K2N | 2 | 3081.6 | 14.28 | 1899.8 |
| Mark | Profile | Grade | QTY | Length | Area | Weight |

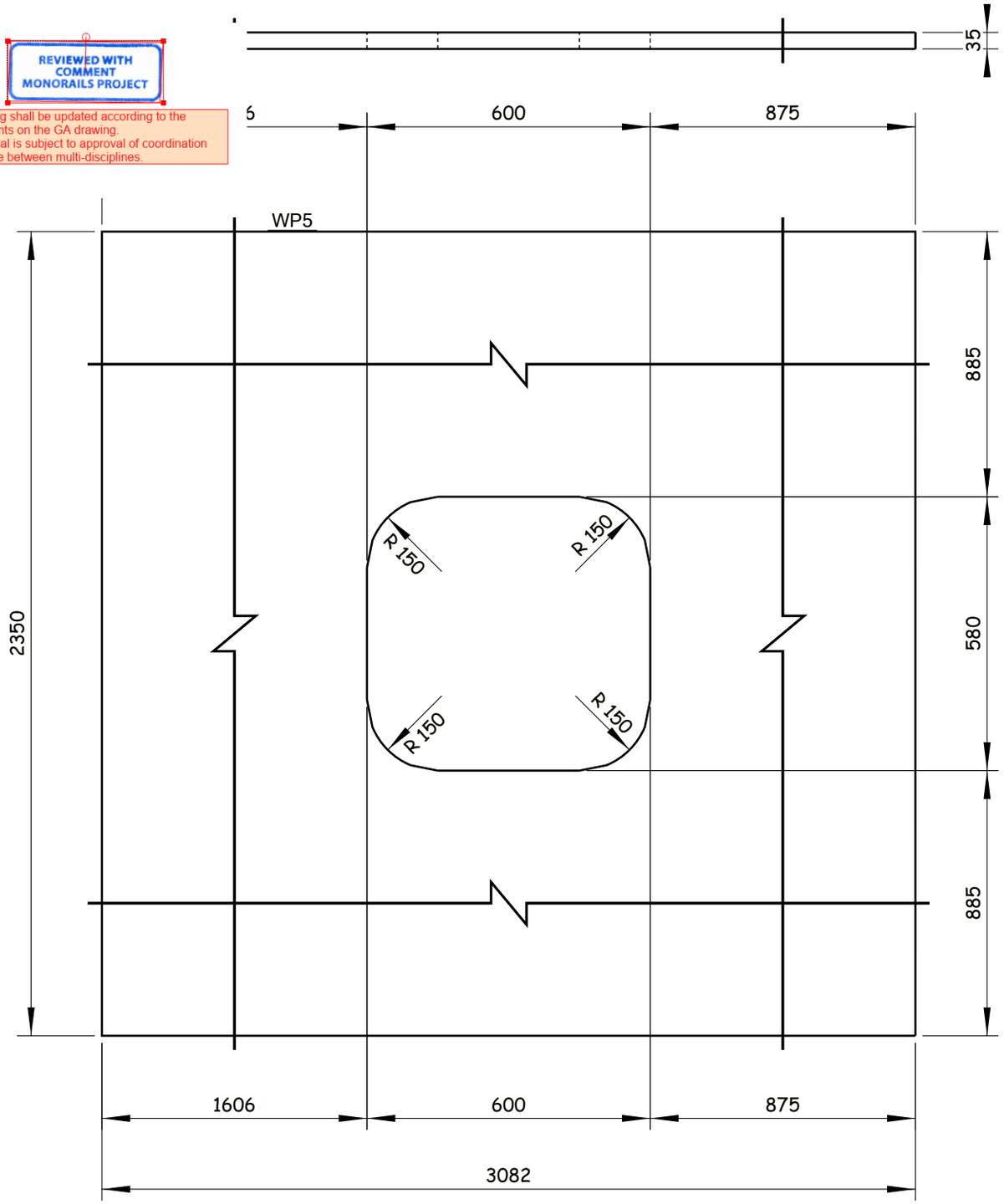


2 Nos. REQUIRED AS DRAWN E.SHWP5

Tekla Structures

GENERAL NOTES:

1. ALL DIMENSIONS ARE IN MILLIMETERS UNLESS OTHERWISE SPECIFIED.
2. LEVELS ARE IN METERS
3. DESIGN SERVICE LIFE OF 100 YEARS.
4. FLANGES OF TOP AND BOTTOM CHORDS TO BE SUPPLIED WITH IMPROVED THROUGH THICKNESS PROPERTIES Z25 ACCORDING TO EN10164.

REFERENCE DRAWINGS

| | |
|---|---|
| 1 | 93M-BOA-NAT-LOT-26612 |
| 2 | |
| 3 | |
| 4 | |
| 5 | |
| 6 | |
| 7 | |
| 8 | |
| 9 | |
| 10 | |
| 11 | |

6TH OF OCTOBER CITY RAIL TRANSIT MONORAIL &
NEW CAPITAL CITY RAIL TRANSIT MONORAIL

The Authority
Hill International
Authority Consultant

ORASCOM CONSTRUCTION
Main Contractor

BOMBARDIER
SENER
SHAKER CONSULTANCY GROUP
Designer

CONTRACTOR & CONSULTANT:
ENGINEERING HOUSE FOR CONSULTANCY

6 October Monorail
Engineering Unit
Valid For Construction

| SCALE | SHOP DRAWING | DATE |
|---|---|---|
| AS SHOWN | | 20.11.2024 |

DRAWING TITLE:
6TH OF OCTOBER MONORAIL
**SHOP DRAWING FOR STRADDLE BENT 6OL11-22C2**
**STEEL RAFTER.**
WP5

| REV | DATE | BY | DESCRIPTION | CHK | APD |
|---|---|---|---|---|---|
| A | 20-11-24 | E.SH | ISSUE FOR APPROVAL | A.SH | M.M |

| Project Code | Rubric | Initiator | Lot | Ref | Number | Revision |
|---|---|---|---|---|---|---|
| 9 3 M | 0 4 0 7 | A C C | 6 0 L 1 1 | D W G | 90587 | A |

REVIEWED WITH COMMENT
MONORAILS PROJECT

-Drawing shall be updated according to the comments on the GA drawing.
-Approval is subject to approval of coordination package between multi-disciplines.

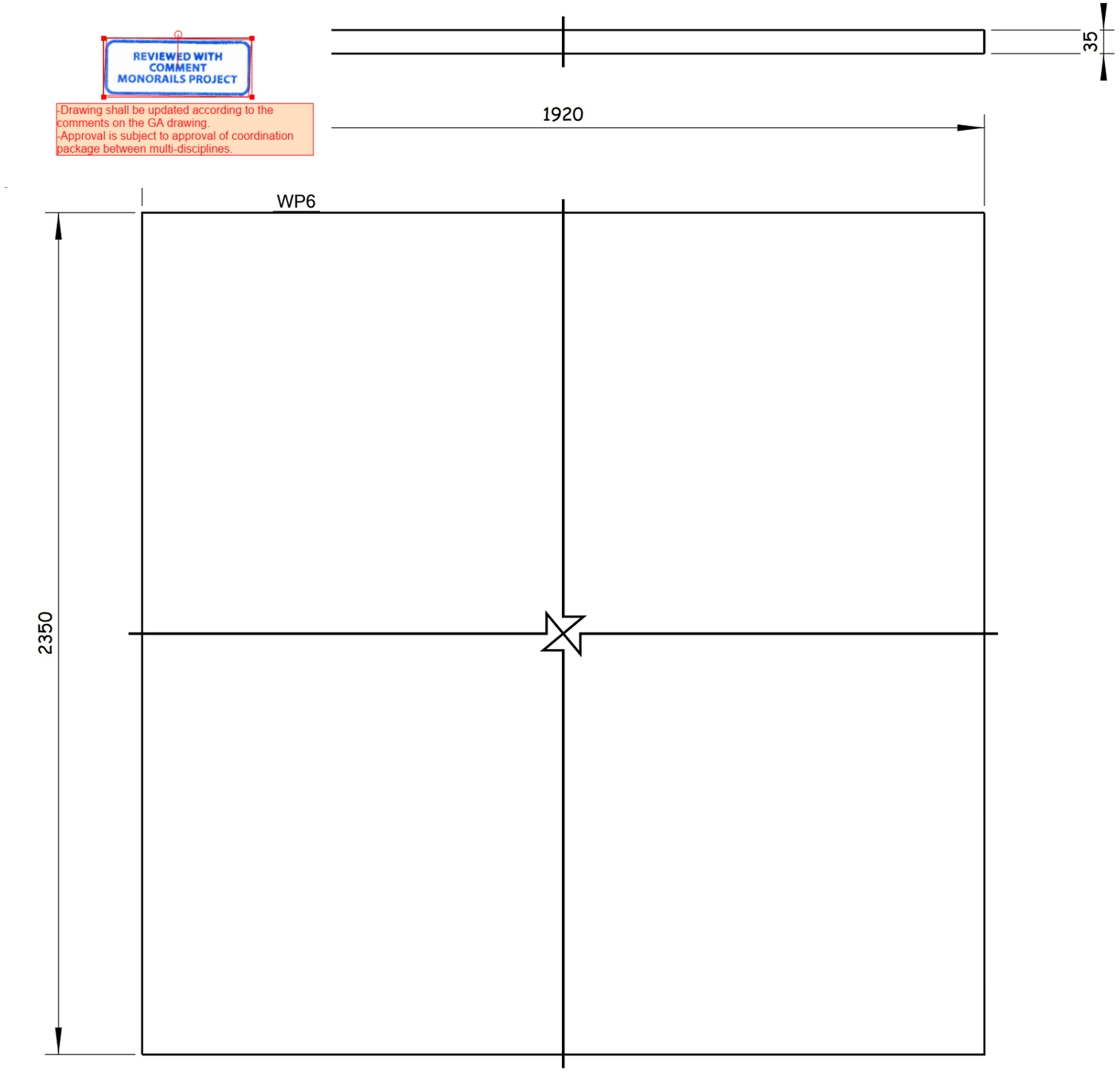


All holes are 22mm U.N.O Length & Area & Weight per piece

| Mark | Profile | Grade | QTY | Length | Area | Weight |
|---|---|---|---|---|---|---|
| WP6 | PL35*1920 | S355K2N | 2 | 2350.0 | 9.32 | 1239.6 |

2 Nos. REQUIRED AS DRAWN E.SHWP6

Tekla Structures

GENERAL NOTES:

1. ALL DIMENSIONS ARE IN MILLIMETERS UNLESS OTHERWISE SPECIFIED.
2. LEVELS ARE IN METERS
3. DESIGN SERVICE LIFE OF 100 YEARS.
4. FLANGES OF TOP AND BOTTOM CHORDS TO BE SUPPLIED WITH IMPROVED THROUGH THICKNESS PROPERTIES Z25 ACCORDING TO EN10164.

REFERENCE DRAWINGS

| | |
|---|---|
| 1 | 93M-BOA-NAT-LOT-26612 |
| 2 | |
| 3 | |
| 4 | |
| 5 | |
| 6 | |
| 7 | |
| 8 | |
| 9 | |
| 10 | |
| 11 | |

6TH OF OCTOBER CITY RAIL TRANSIT MONORAIL &
NEW CAPITAL CITY RAIL TRANSIT MONORAIL

The Authority
Hill International
Authority Consultant

Main Contractor

Designer

CONTRACTOR & CONSULTANT:
ENGINEERING HOUSE FOR CONSULTANCY

SCALE: AS SHOWN | CHK'D DRAWING | DATE: 20.11.2024

| REV | DATE | BY | DESCRIPTION | CHK | APD |
|---|---|---|---|---|---|
| A | 20-11-24 | E.SH | ISSUE FOR APPROVAL | A.SH | M.M |

6 October Monorail
Engineering Unit
Valid For Construction

DRAWING TITLE:
6TH OF OCTOBER MONORAIL
**SHOP DRAWING FOR STRADDLE BENT 6OL11-22C2**
**STEEL RAFTER.**
WP6

| Project Code | Rubric | Initiator | Lot | Ref | Number | Revision |
|---|---|---|---|---|---|---|
| 93 | M0407 | ACC | 60L11 | DWG | 90588 | A |

REVIEWED WITH COMMENT
MONORAILS PROJECT

-Drawing shall be updated according to the comments on the GA drawing.
-Approval is subject to approval of coordination package between multi-disciplines.

| All holes are 22mm U.N.O Length & Area & Weight per piece | | | | | | |
|---|---|---|---|---|---|---|
| WP7 | PL35*2350 | S355K2N | 2 | 3074.9 | 14.25 | 1895.4 |
| Mark | Profile | Grade | QTY | Length | Area | Weight |

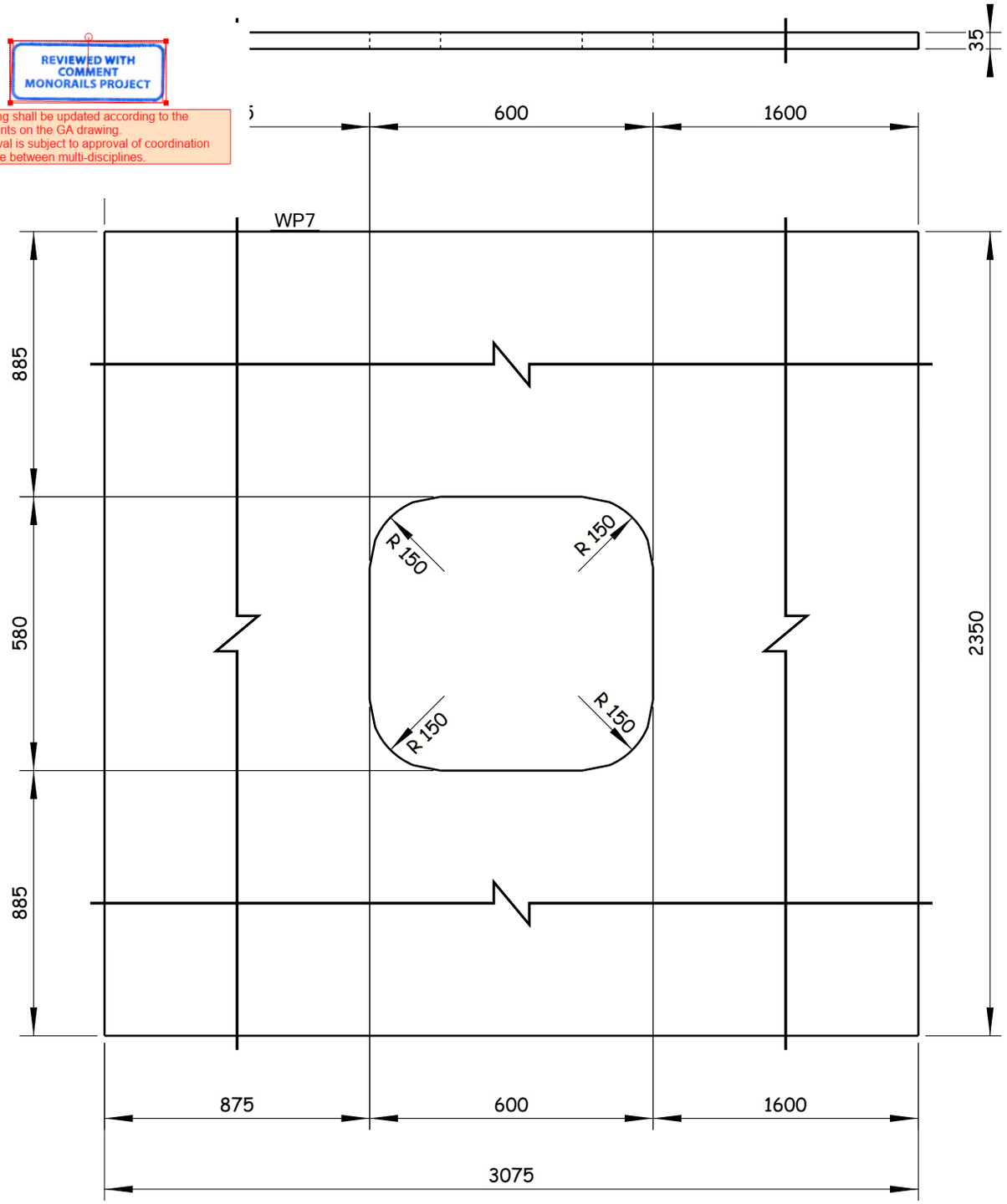


2 Nos. REQUIRED AS DRAWN E.SHWP7

Tekla Structures

GENERAL NOTES:

1. ALL DIMENSIONS ARE IN MILLIMETERS UNLESS OTHERWISE SPECIFIED.
2. LEVELS ARE IN METERS
3. DESIGN SERVICE LIFE OF 100 YEARS.
4. FLANGES OF TOP AND BOTTOM CHORDS TO BE SUPPLIED WITH IMPROVED THROUGH THICKNESS PROPERTIES Z25 ACCORDING TO EN10164.

REFERENCE DRAWINGS

| | |
|---|---|
| 1 | 93M-BOA-NAT-LOT-26612 |
| 2 | |
| 3 | |
| 4 | |
| 5 | |
| 6 | |
| 7 | |
| 8 | |
| 9 | |
| 10 | |
| 11 | |

6TH OF OCTOBER CITY RAIL TRANSIT MONORAIL &
NEW CAPITAL CITY RAIL TRANSIT MONORAIL

The Authority
Hill International
Authority Consultant

ORASCOM CONSTRUCTION
Main Contractor

BOMBARDIER
SENER
SHAKER CONSULTANCY GROUP
Designer

CONTRACTOR & CONSULTANT:
ENGINEERING HOUSE FOR CONSULTANCY

6 October Monorail
Engineering Unit
Valid For Construction

| SCALE | SHOP DRAWING | DATE |
|---|---|---|
| AS SHOWN | | 20.11.2024 |

| REV | DATE | BY | DESCRIPTION | CHK | APD |
|---|---|---|---|---|---|
| A | 20-11-24 | E.SH | ISSUE FOR APPROVAL | A.SH | M.M |

DRAWING TITLE:
6TH OF OCTOBER MONORAIL
**SHOP DRAWING FOR STRADDLE BENT 6OL11-22C2**
**STEEL RAFTER.**
WP7

| Project Code | Rubric | Initiator | Lot | Ref | Number | Revision |
|---|---|---|---|---|---|---|
| 9 3 M | 0 4 0 7 | A C C | 6 0 L 1 1 | D W G | 90589 | A |

REVIEWED WITH COMMENT
MONORAILS PROJECT

-Drawing shall be updated according to the comments on the GA drawing.
-Approval is subject to approval of coordination package between multi-disciplines.

All holes are 22mm U.N.O Length & Area & Weight per piece

| Mark | Profile | Grade | QTY | Length | Area | Weight |
|---|---|---|---|---|---|---|
| WP8 | PL20*3225 | S355J2N | 1 | 12000.0 | 77.54 | 6038.7 |

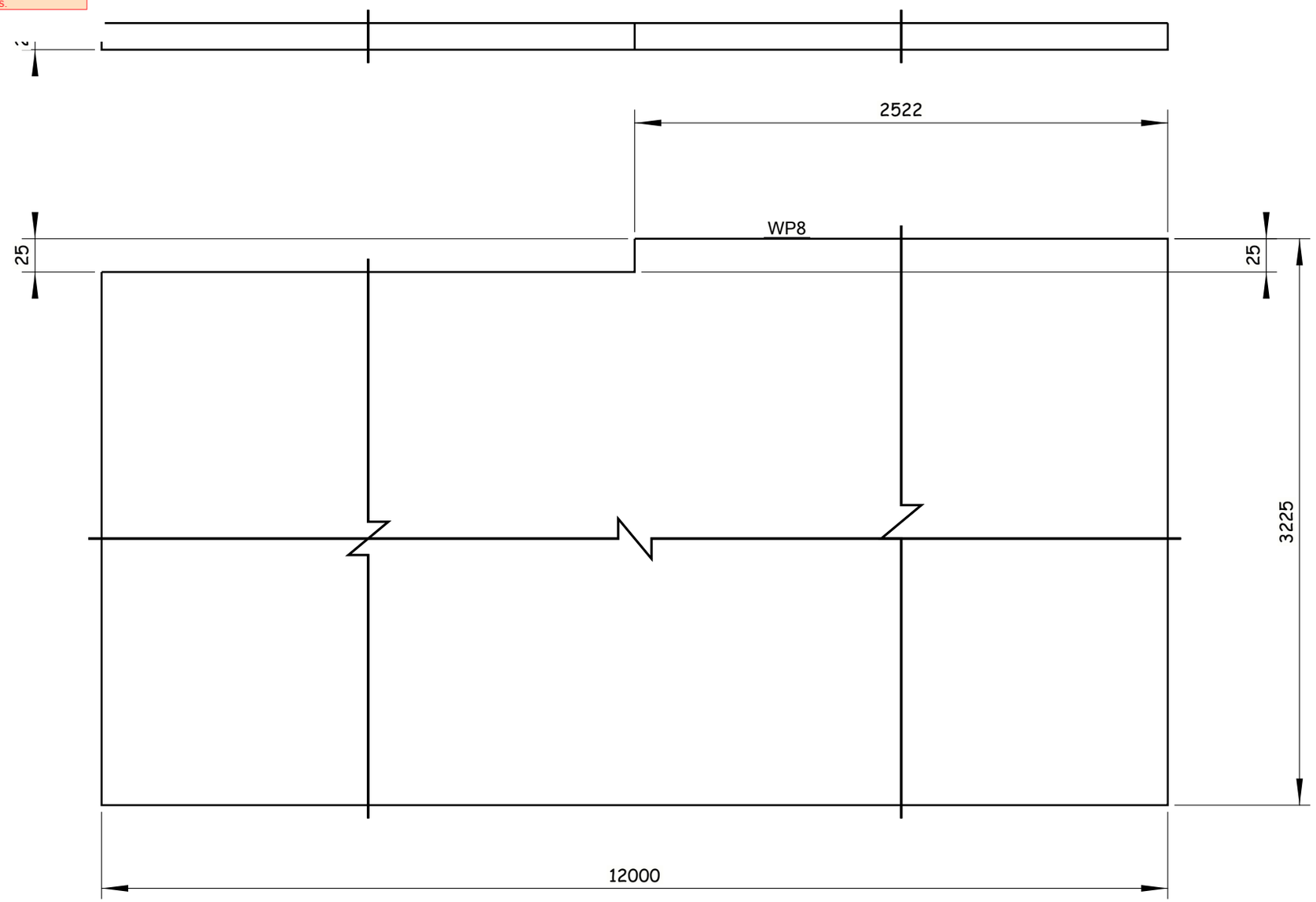


1 Nos. REQUIRED AS DRAWN E.SHWP8

Tekla Structures

GENERAL NOTES:

1. ALL DIMENSIONS ARE IN MILLIMETERS UNLESS OTHERWISE SPECIFIED.
2. LEVELS ARE IN METERS
3. DESIGN SERVICE LIFE OF 100 YEARS.
4. FLANGES OF TOP AND BOTTOM CHORDS TO BE SUPPLIED WITH IMPROVED THROUGH THICKNESS PROPERTIES Z25 ACCORDING TO EN10164.

REFERENCE DRAWINGS

| | |
|---|---|
| 1 | 93M-BOA-NAT-LOT-26612 |
| 2 | |
| 3 | |
| 4 | |
| 5 | |
| 6 | |
| 7 | |
| 8 | |
| 9 | |
| 10 | |
| 11 | |

6TH OF OCTOBER CITY RAIL TRANSIT MONORAIL &
NEW CAPITAL CITY RAIL TRANSIT MONORAIL

The Authority
Hill International
Authority Consultant

Main Contractor

Designer

CONTRACTOR CONSULTANT:
ENGINEERING HOUSE FOR CONSULTANCY

SCALE: AS SHOWN
CHK'D DRAWING
DATE: 20.11.2024

| REV | DATE | BY | DESCRIPTION | CHK | APD |
|---|---|---|---|---|---|
| A | 20-11-24 | E.SH | ISSUE FOR APPROVAL | A.SH | M.M |

6 October Monorail
Engineering Unit
Valid For Construction

DRAWING TITLE:
6TH OF OCTOBER MONORAIL
SHOP DRAWING FOR STRADDLE BENT 6OL11-22C2
STEEL RAFTER.
WP8

| Project Code | Rubric | Initiator | Lot | Ref | Number | Revision |
|---|---|---|---|---|---|---|
| 93 | M0407 | ACC | 60L11 | DWG | 90590 | A |

All holes are 22mm U.N.O  Length & Area & Weight per piece

| Mark | Profile | Grade | QTY | Length | Area | Weight |
|---|---|---|---|---|---|---|
| WP9 | PL20*3225 | S355J2N | 2 | 12000.0 | 78.01 | 6075.9 |

REVIEWED WITH COMMENT
MONORAILS PROJECT

-Drawing shall be updated according to the comments on the GA drawing.
-Approval is subject to approval of coordination package between multi-disciplines.

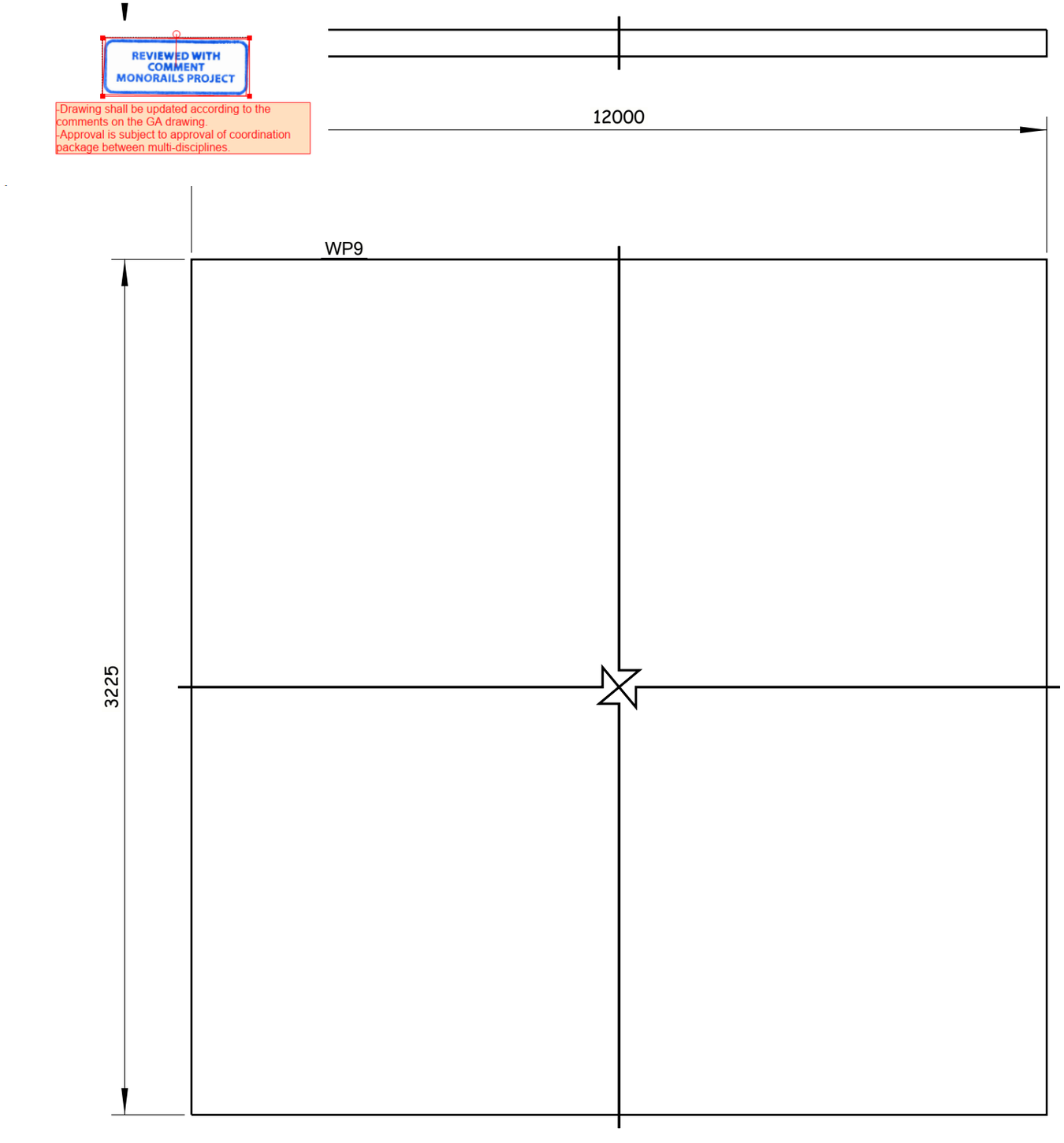


2 Nos. REQUIRED AS DRAWN E.SHWP9

Tekla Structures

GENERAL NOTES:

1. ALL DIMENSIONS ARE IN MILLIMETERS UNLESS OTHERWISE SPECIFIED.
2. LEVELS ARE IN METERS
3. DESIGN SERVICE LIFE OF 100 YEARS.
4. FLANGES OF TOP AND BOTTOM CHORDS TO BE SUPPLIED WITH IMPROVED THROUGH THICKNESS PROPERTIES Z25 ACCORDING TO EN10164.

REFERENCE DRAWINGS

| | |
|---|---|
| 1 | 93M-BOA-NAT-LOT-26612 |
| 2 | |
| 3 | |
| 4 | |
| 5 | |
| 6 | |
| 7 | |
| 8 | |
| 9 | |
| 10 | |
| 11 | |

6TH OF OCTOBER CITY RAIL TRANSIT MONORAIL &
NEW CAPITAL CITY RAIL TRANSIT MONORAIL

The Authority
Hill International
Authority Consultant

ORASCOM CONSTRUCTION
BOMBARDIER
Main Contractor

SENER
SHAKER CONSULTANCY GROUP
Designer

CONTRACTOR & CONSULTANT:
ENGINEERING HOUSE FOR CONSULTANCY

SCALE: AS SHOWN
CHK'D DRAWING
DATE: 20.11.2024

6 October Monorail
Engineering Unit
Valid For Construction

| REV | DATE | BY | DESCRIPTION | CHK | APD |
|---|---|---|---|---|---|
| A | 20-11-24 | E.SH | ISSUE FOR APPROVAL | A.SH | M.M |

DRAWING TITLE:
6TH OF OCTOBER MONORAIL
**SHOP DRAWING FOR STRADDLE BENT 6OL11-22C2**
**STEEL RAFTER.**
WP9

| Project Code | Rubric | Initiator | Lot | Ref | Number | Revision |
|---|---|---|---|---|---|---|
| 93M | 04 07 | ACC | 60 L 11 | DWG | 90591 | A |

REVIEWED WITH COMMENT
MONORAILS PROJECT

-Drawing shall be updated according to the comments on the GA drawing.
-Approval is subject to approval of coordination package between multi-disciplines.

All holes are 22mm U.N.O Length & Area & Weight per piece

| Mark | Profile | Grade | QTY | Length | Area | Weight |
|---|---|---|---|---|---|---|
| WP10 | PL20*3225 | S355J2N | 1 | 12000.0 | 77.58 | 6042.4 |

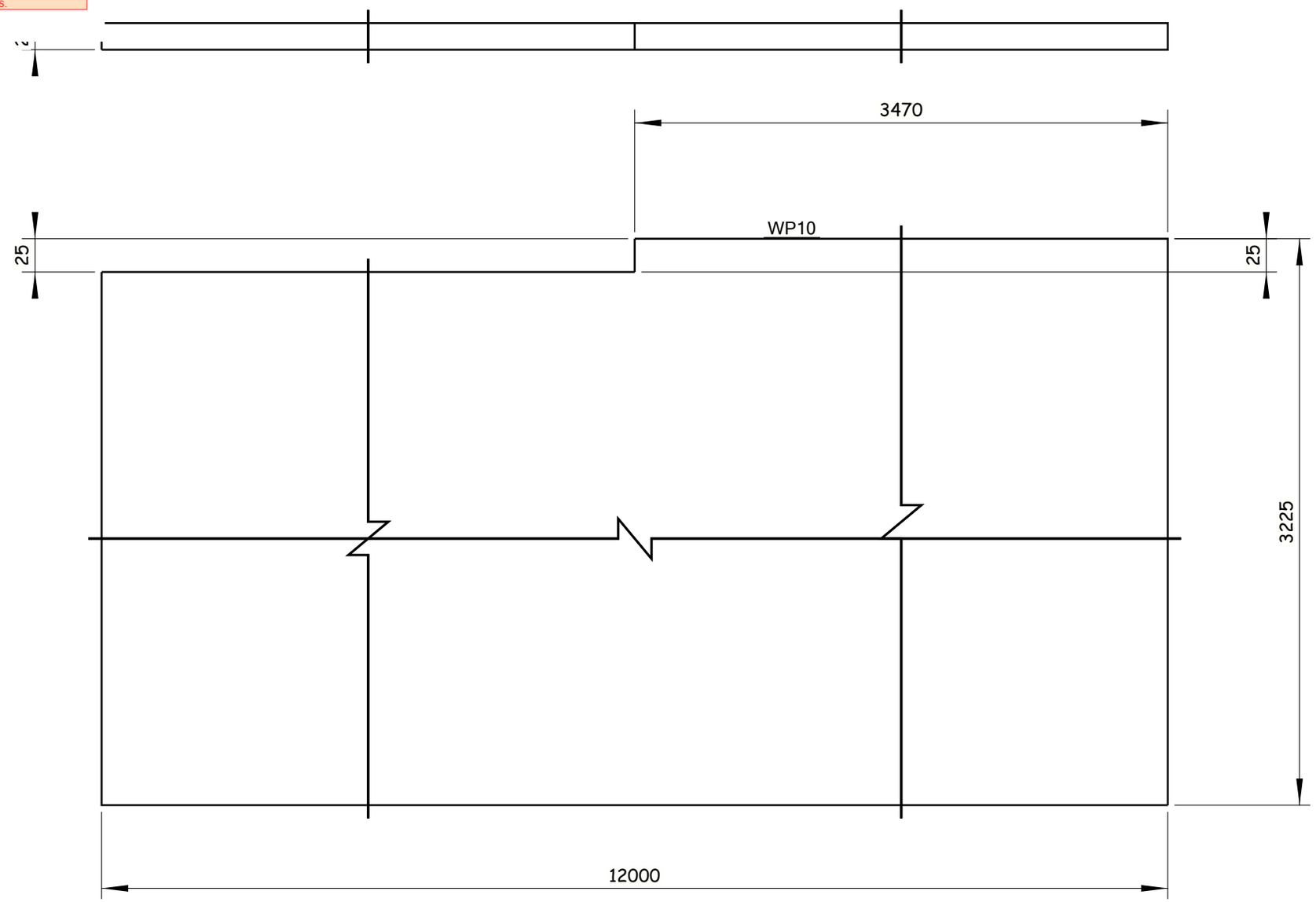


1 Nos. REQUIRED AS DRAWN E.SHWP10

Tekla Structures

GENERAL NOTES:

1. ALL DIMENSIONS ARE IN MILLIMETERS UNLESS OTHERWISE SPECIFIED.
2. LEVELS ARE IN METERS
3. DESIGN SERVICE LIFE OF 100 YEARS.
4. FLANGES OF TOP AND BOTTOM CHORDS TO BE SUPPLIED WITH IMPROVED THROUGH THICKNESS PROPERTIES Z25 ACCORDING TO EN10164.

REFERENCE DRAWINGS

| | |
|---|---|
| 1 | 93M-BOA-NAT-LOT-26612 |
| 2 | |
| 3 | |
| 4 | |
| 5 | |
| 6 | |
| 7 | |
| 8 | |
| 9 | |
| 10 | |
| 11 | |

6TH OF OCTOBER CITY RAIL TRANSIT MONORAIL &
NEW CAPITAL CITY RAIL TRANSIT MONORAIL

The Authority
Hill International
Authority Consultant

ORASCOM CONSTRUCTION
Main Contractor

SENER
SHAKER CONSULTANCY GROUP
Designer

CONTRACTOR
CONSULTANT:
ENGINEERING HOUSE FOR CONSULTANCY

SCALE: AS SHOWN
CHK'D DRAWING
DATE: 20.11.2024

| REV | DATE | BY | DESCRIPTION | CHK | APD |
|---|---|---|---|---|---|
| A | 20-11-24 | E.SH | ISSUE FOR APPROVAL | A.SH | M.M |

6 October Monorail
Engineering Unit
Valid For Construction

DRAWING TITLE:
6TH OF OCTOBER MONORAIL
SHOP DRAWING FOR STRADDLE BENT 6OL11-22C2
STEEL RAFTER.
WP10

| Project Code | Rubric | Initiator | Lot | Ref | Number | Revision |
|---|---|---|---|---|---|---|
| 93M | 04 07 | ACC | 60L11 | DWG | 90592 | A |

REVIEWED WITH COMMENT
MONORAILS PROJECT

-Drawing shall be updated according to the comments on the GA drawing.
-Approval is subject to approval of coordination package between multi-disciplines.

All holes are 22mm U.N.O  Length & Area & Weight per piece

| Mark | Profile | Grade | QTY | Length | Area | Weight |
|---|---|---|---|---|---|---|
| WP11 | PL20*3225 | S355J2N | 1 | 12000.0 | 77.90 | 6067.3 |

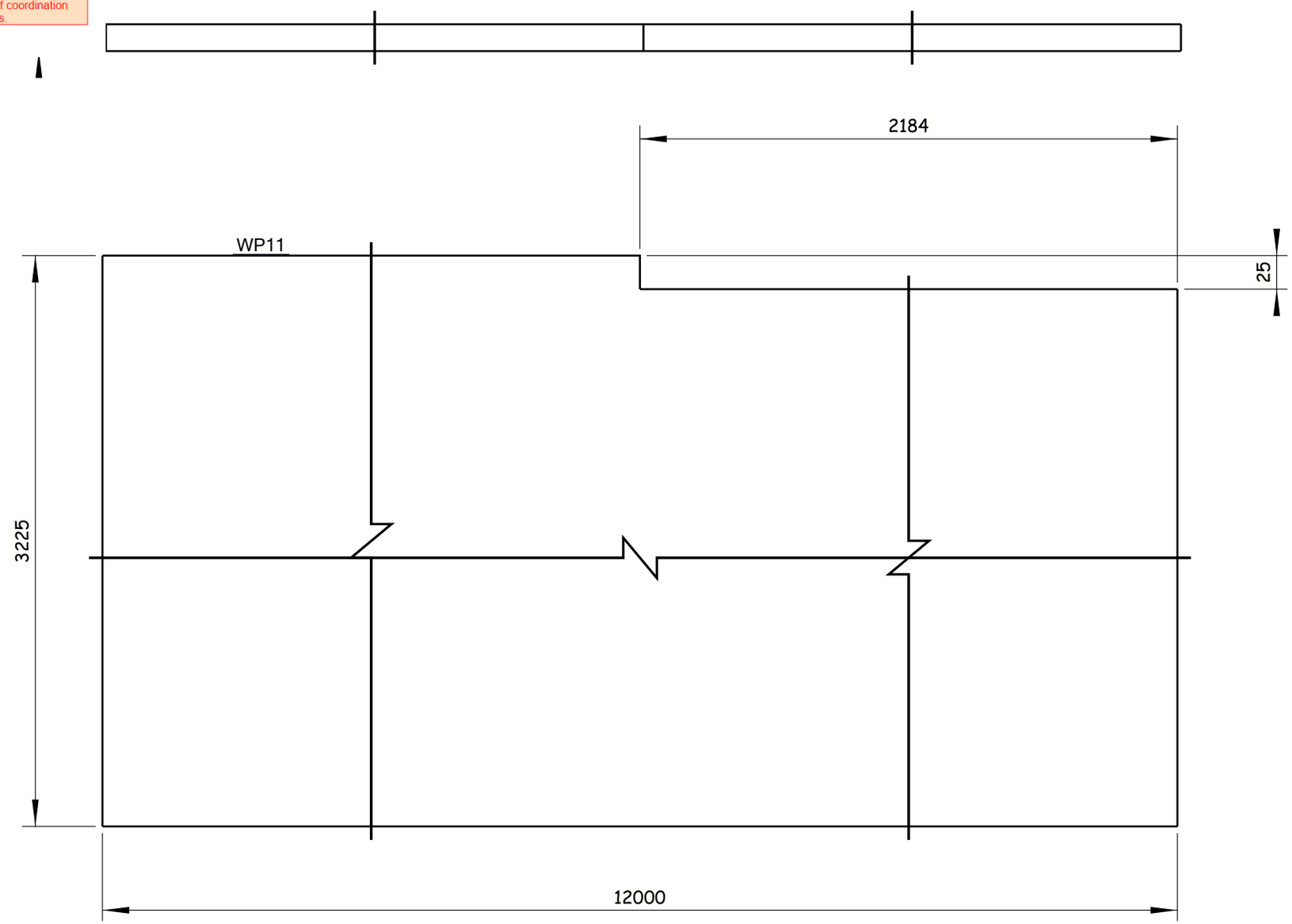


1 Nos. REQUIRED AS DRAWN E.SHWP11

Tekla Structures

GENERAL NOTES:

1. ALL DIMENSIONS ARE IN MILLIMETERS UNLESS OTHERWISE SPECIFIED.
2. LEVELS ARE IN METERS
3. DESIGN SERVICE LIFE OF 100 YEARS.
4. FLANGES OF TOP AND BOTTOM CHORDS TO BE SUPPLIED WITH IMPROVED THROUGH THICKNESS PROPERTIES Z25 ACCORDING TO EN10164.

REFERENCE DRAWINGS

| | |
|---|---|
| 1 | 93M-BOA-NAT-LOT-26612 |
| 2 | |
| 3 | |
| 4 | |
| 5 | |
| 6 | |
| 7 | |
| 8 | |
| 9 | |
| 10 | |
| 11 | |

6TH OF OCTOBER CITY RAIL TRANSIT MONORAIL &
NEW CAPITAL CITY RAIL TRANSIT MONORAIL

The Authority
Hill International
Authority Consultant

Main Contractor

Designer

CONTRACTOR CONSULTANT:
ENGINEERING HOUSE FOR CONSULTANCY

SCALE: AS SHOWN | CHK'D DRAWING | DATE: 20.11.2024

| REV | DATE | BY | DESCRIPTION | CHK | APD |
|---|---|---|---|---|---|
| A | 20-11-24 | E.SH | ISSUE FOR APPROVAL | A.SH | M.M |

6 October Monorail
Engineering Unit
Valid For Construction

DRAWING TITLE:
6TH OF OCTOBER MONORAIL
SHOP DRAWING FOR STRADDLE BENT 6OL11-22C2
STEEL RAFTER.
WP11

| Project Code | Rubric | Initiator | Lot | Ref | Number | Revision |
|---|---|---|---|---|---|---|
| 93M | 04 07 | ACC | 60L11 | DWG | 90593 | A |